PULSE LAB.

transistor adaptors

INSTRUCTION MANUAL

Q601

electronic
measuring
instruments
WAYNE KERR

TRANSISTOR ADAPTORS

Q601 DC CONTROL UNIT
and
ADAPTORS

FOR TRANSISTOR PARAMETER MEASUREMENT
WITH R.F. BRIDGE B601

THE WAYNE KERR LABORATORIES LIMITED
ROEBUCK ROAD · CHESSINGTON · SURREY · ENGLAND

Telephone: LOWER HOOK 1131

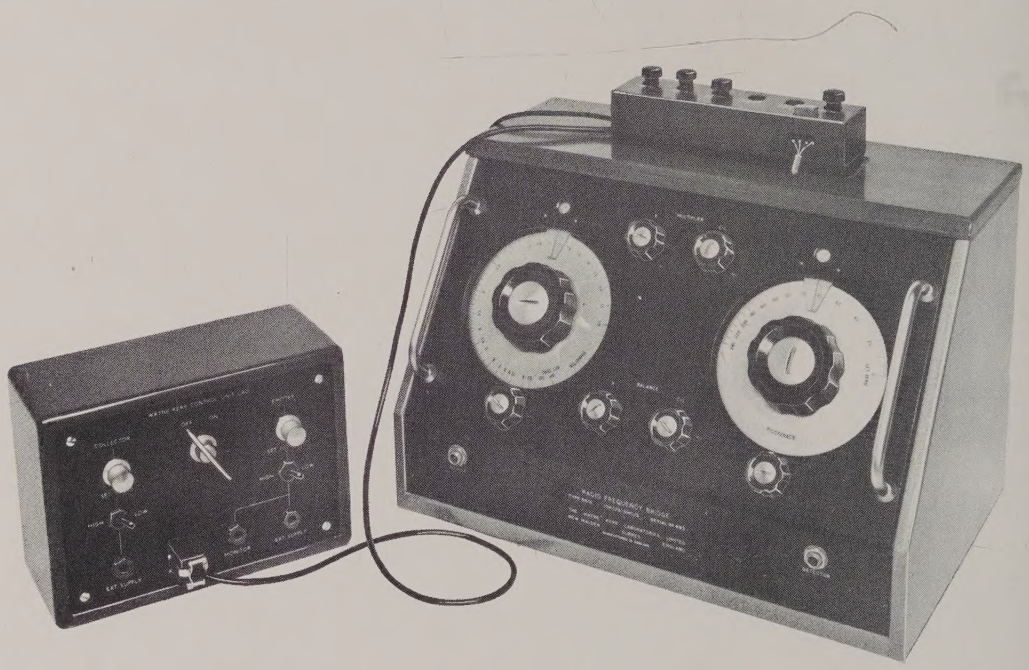

Fig. 1. Transistor Measuring Equipment

Contents

		page
Section 1	INTRODUCTION	5
2	THE WAYNE KERR R.F. BRIDGE B601	7
2.1	Adaptors	7
2.2	Configuration of the Bridge in Measurement	7
2.3	Alteration to the Bridge Circuit	7
2.4	Elimination of Capacitive Error caused by the Potentiometer R1	8
3	MEASUREMENT OF TRANSISTOR PARAMETERS UNDER SMALL-SIGNAL CONDITIONS	10
3.1	Transistor Equivalent Circuits	10
3.1.1	Introduction	10
3.1.2	Common Equivalent Circuits	10
3.1.3	Exact Equivalent Circuit of the Triode Transistor	10
3.1.4	Simplified Transistor Equivalent Circuits	11
	Grounded-base T Equivalent Circuit	11
	Low-frequency T Circuit	11
	Hybrid π Grounded-emitter Circuit	11
3.2	Behaviour of Transistor Parameters with D.C. Currents and Voltages	12
3.3	Four-terminal Networks	13
3.3.1	Definition of Y-parameters	13
3.3.2	Grounded-base Circuit	13
3.3.3	Grounded-emitter Circuit	13
3.3.4	Grounded-collector Circuit	14
3.3.5	Calculation of all Remaining Parameters of a Transistor	15
	Matrix of the Transistor Circuit	15
4	PRACTICAL ADAPTORS	16
4.1	Effects of Stray Capacitances	16
4.2	Effect of Stray Inductances	16
4.3	Effect of Inadequate Screening	16
4.4	Choice of Decoupling Circuits associated with D.C. Supplies	16
4.5	Choice of Suitable Components for D.C. Supply Circuits	16
4.6	D.C. Supplies	17
4.7	A.C. Signal Levels	17
4.8	Mechanical Design	17
5	DESIGN OF INDIVIDUAL ADAPTORS	18
5.1	Input Admittance in Grounded-base Configuration, (Y_{11}) (Q601B)	18
5.1.1	Accuracy (Y_{11}) (Q601B)	18
5.1.2	Operating Instructions (Y_{11}) (Q601B)	18
5.2	Output Admittance in Grounded-base Configuration, (Y_{22}) (Q601C)	19
5.2.1	Accuracy (Y_{22}) (Q601C)	19
5.2.2	Operating Instructions (Y_{22}) (Q601C)	19
5.3	Grounded-base Current Gain (α) (Q601D)	19
5.3.1	Accuracy (α) (Q601D)	21
5.3.2	Operating Instructions (α) (Q601D)	21
5.4	Input Admittance in Grounded-emitter Configuration (Y_{11}') (Q601A)	21
5.4.1	Accuracy (Y_{11}') (Q601A)	21
5.4.2	Operating Instructions (Y_{11}') (Q601A)	22
5.5	Transfer Admittance in Grounded-emitter Configuration (Y_{21}') (Q601E)	22
5.5.1	Phase-reversing Transformer	22
5.5.2	Accuracy (Y_{21}') (Q601E)	22
5.5.3	Operating Instructions (Y_{21}') (Q601E)	23
5.5.4.	Interpretation of Bridge Readings	23
5.6	Grounded-emitter Current Gain (α')	23
5.6.1	α less than 0·9	23
5.6.2	α greater than 0·9	23
5.7	Reverse Transfer Admittance in Grounded-emitter Configuration Y_{12}'	24
5.7.1	Use of Y_{21}' Adaptor (Q601E)	24
5.7.2	Operating Instructions Y_{12}'	24
5.7.3	Accuracy Y_{12}'	24
5.8	D.C. Control Unit	24

			page
Appendix	I	α Adaptor. Correction for stray capacitance C across resistor R	26
	II	α Adaptor. Correction of the α results for the effects of base resistance and collector capacitance, and for the effective stray capacitance across the emitter feed resistor	27
	III	Y_{11}' Adaptor. Effect of inductances in series with the emitter and the base of the transistor and the shunt capacitance from collector to Neutral ..	29
	IV	Y_{11}' Adaptor. Analysis of circuit and phase-shifts introduced by D.C. supplies	29
	V	Y_{21}' Adaptor. Correction for low-frequency errors	32
	VI	Y_{21}' Adaptor. Correction for high-frequency error	34
		Transistor Adaptor Component List (including D.C. Control Unit) ..	36

Illustrations

Fig. 1	Transistor Measuring Equipment ... ... page	2
Fig. 2	Transistor Measurement	5
Fig. 3	Type B601 Bridge	6
Fig. 4	Control Unit Q601 and Y_{11}' Adaptor	6
Fig. 5	B601 Equivalent Circuit	8
Fig. 6	Typical Correction Curve	9
Fig. 7	Exact Equivalent Circuit of Transistor	10
Fig. 8	Grounded-base T Equivalent Circuit	11
Fig. 9	Low-frequency Equivalent Circuits	11
Fig. 10 (*a*)	Hybrid π Grounded-emitter Circuit	11
Fig. 10 (*b*)	Typical Values for OC45	12
Fig. 10 (*c*)	Very High Frequency Circuit	12
Fig. 11	Definition of 'Y' Parameters of a Transistor	13
Fig. 12	Simplified Measuring Circuits using Bridge B601 ...	14
Fig. 13 (*a*)	Basic α Circuit	19
Fig. 13 (*b*)	Main Stray Capacitances in α Circuit	20
Fig. 14	α Adaptor—Simplified Equivalent Circuit	27
Fig. 15	Y_{11}' Adaptor—Unwanted Reactances ωL_1, ωL_2 and $1/\omega C$	29
Fig. 16	Y_{11}' Adaptor—Phase Shift Analysis	30
Fig. 17	Y_{11}' Effective Measurement Circuit	30
Fig. 18	Low-frequency Equivalent Circuit of Y_{21}' Measurement	33
Fig. 19	High-frequency Equivalent Circuit of Y_{21}' Measurement	34
Fig. 20	Circuit Diagram, Y_{22} Adaptor Q601C	37
Fig. 21	,, ,, Y_{11} ,, Q601B	37
Fig. 22	,, ,, Y_{11}' ,, Q601A	37
Fig. 23	,, ,, α ,, Q601D	37
Fig. 24	,, ,, Y_{21}' ,, Q601E	37
Fig. 25	,, ,, Control Unit Q601	37

I INTRODUCTION

When dealing with transistors, the following information is required:

(*a*) d.c. and low-frequency characteristics which, usually, are provided by the manufacturer in the form of curves and values relating to emitter and base resistance, collector impedance, etc.

(*b*) 'black box' parameters which are measured under small-signal conditions and refer to the performance of the transistor under class A operation.

Once a departure is made from very low frequencies of operation, the transistor must be represented as a complex four-terminal device. The 'black box' parameters become of paramount importance when transistors are to be operated over a wide band of frequencies and when maximum efficiency of operation is to be ensured.

The parameters of transistors can be defined in a number of ways. A tendency exists to reduce such representation to the Y (i.e. admittance) or H (i.e. hybrid, a mixture of admittance and impedance) parameters. When dealing with H parameters, the forward current gain in the grounded-base condition, α (H_{21}), is given automatically.

In order to measure the Y or H parameters to a high degree of accuracy, a three-terminal measurement is essential. Although a two-terminal measurement of certain parameters is possible, it becomes difficult to connect the d.c. supplies in such a way as not to influence these parameters.

Since the tendency now is to standardise at higher frequencies on Y and α parameters, the transistor adaptors described here have been designed to measure only these.

Fig. 2. Transistor Measurement

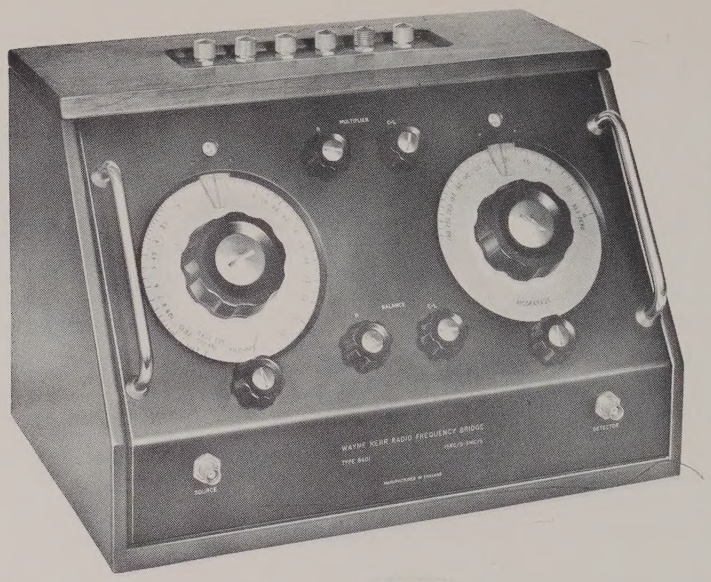

Fig. 3. Type B601 Bridge

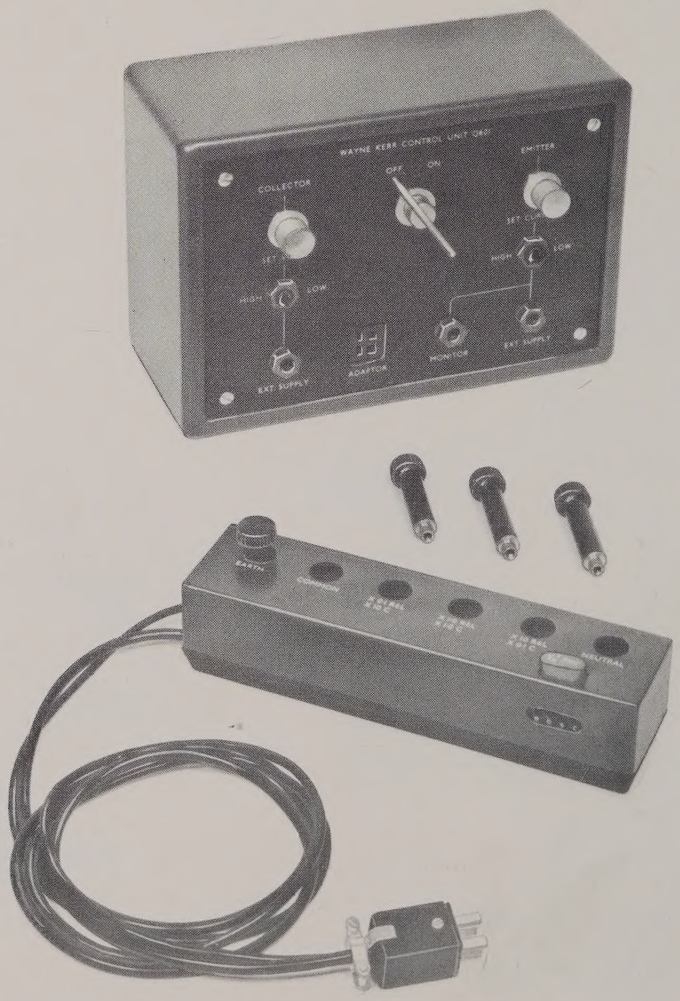

Fig. 4. Control Unit Q601 and Y_{11}' Adaptor

2 THE WAYNE KERR R.F. BRIDGE B601

This Bridge uses the transformer ratio arm technique and provides three-terminal measuring facilities in the frequency band 15kc/s to 5Mc/s. It covers a very wide measurement range of resistance (10Ω to 10MΩ) and capacitance (0·01pF to 0·02μF). Inductance is measured as the equivalent negative capacitance. The B601 Handbook describes all the facilities provided by the Bridge. An important feature is that any shunt impedances connected across the voltage and current transformers have very little effect on the measurement of an impedance connected between the COMMON and X terminals.

2.1 ADAPTORS

In order to introduce a transistor to the Bridge, special adaptors are necessary. The adaptors have been so designed that they themselves introduce minimum error (usually less than 1 per cent) up to the highest frequency of the Bridge. Whenever necessary, corrections are supplied, or a special method of measurement (outlined in this handbook) is employed in order to keep these errors to the minimum. The user should study this handbook, so as to appreciate the advantages and limitations of the various measurement techniques.

The original design work on the prototype adaptors was carried out by the Mullard Research Laboratories in collaboration with Wayne Kerr.

The Bridge B601 measures with an accuracy of 1 per cent over the major part of its range and, with the adaptors, the measurement system constitutes the most advanced method of measuring small-signal parameters.

The adaptors were designed originally to measure the parameters of transistors OC44, OC45, and similar types at an approximate emitter current of 1mA. Other currents can be used, however, and transistors of different frequency coverage, but within the range of 15kc/s to 5Mc/s, can also be measured. Thus the transistor adaptors have a quite general application.

Two series of adaptors have been designed, one series for PNP transistors and the other for NPN transistors. It should be noted that adaptors for one type of transistor will not generally be suitable for the other without extensive modification.

2.2 CONFIGURATION OF THE BRIDGE IN MEASUREMENT

The adaptors have been so designed that they are always used with the NEUTRAL terminal of the Bridge earthed. This ensures that most of the stray capacitances and unwanted resistances appear across the input and output transformers of the Bridge. The d.c. supplies which are normally decoupled to earth are also decoupled to NEUTRAL. All the d.c. supply elements appear across the Bridge transformers.

2.3 ALTERATION TO THE BRIDGE CIRCUIT *See note p. 25*)

The Bridge B601 is supplied normally for the measurement of either unbalanced or balanced admittances. To provide for balanced measurements, two capacitors, *TC*1 (3–30pF) and *C*4 (100pF), are used to equalise the capacitance of the COMMON terminal to Earth and that of the NEUTRAL to Earth. The connecting wires to *TC*1 and *C*4 lie along the strip carrying the terminals.

In normal operation the NEUTRAL terminal is free (i.e. not earthed) and negligible error is introduced during the measurement.

In transistor measurements, to obtain the highest accuracy the NEUTRAL terminal is earthed. When this is done, an unwanted loop would be formed and a current would pass through these capacitors and the earthed NEUTRAL terminal connexion. This current would induce voltages in other parts of the measuring circuit (mainly in the adaptor printed board connexions) and cause errors, especially at higher frequencies.

The two capacitors should, therefore, be disconnected from the COMMON terminal. *TC*1 and *C*4 are located under the terminal block of the Bridge and in order to disconnect them the following procedure should be adopted:

(*a*) Remove the two bolts at the back of the case, lift the top of the Bridge and slide the instrument from its case.

(*b*) Lay the instrument on its front panel and undo the nut at the bottom of the COMMON terminal.

(*c*) Lift off the solder tag to which *C*4 and *TC*1 are connected.

(*d*) Replace the nut, ensuring that the solder tag holding the 4·7kΩ resistor is returned to its former position on the COMMON terminal.

(*e*) Bend back *C*4 and *TC*1 and the associated solder tag so that they are clear of any other part of the circuit.

(*f*) Replace the instrument in its case.

If at any time the Bridge is required for balanced measurements, it will be necessary to reverse the operation and set up *TC*2 as outlined in the Bridge handbook under 'Maintenance' (*paragraphs* 8, 9, 10 *and* 11).

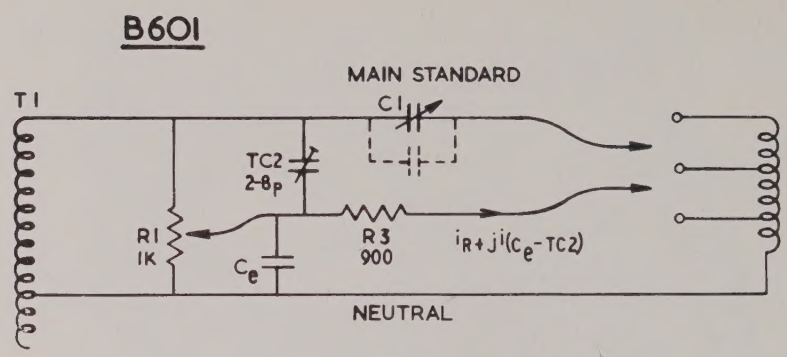

Fig. 5. B601 Equivalent Circuit

2.4 ELIMINATION OF CAPACITIVE ERROR CAUSED BY THE POTENTIOMETER R1

An equivalent circuit of the Bridge is shown in Fig. 5.

C_e = capacitance of wiper to NEUTRAL (unwanted)

$TC2$ = capacitance added to balance effect of C_e to zero at $R1$ setting of approximately 2·2kΩ.

When the potentiometer wiper is at the top or bottom position, the total capacitance effect is zero, since, in the top position C_e shunts $T1$, whilst in the bottom position of the wiper the voltage across C_e is zero.

The trimmer capacitor $TC2$ is so adjusted that, with the potentiometer dial set at 2·2kΩ, the current due to $TC2$ cancels that due to C_e.

For $R1$ dial settings within the limits 0 to 2·2kΩ and 2·2kΩ to ∞ there will be a difference between the two capacitive currents (in addition to the resistive current i_R due to $R3$) which the operator will balance out using $C1$. This (difference) capacitive current $ji\ (C_e - TC2)$ is equivalent to an additional capacitance (+ve or —ve) across $C1$ (*shown dotted in Fig.* 5) and constitutes an error in the reactive component of the measured unknown impedance.

It is necessary to establish the value of this additional capacitance and then add it to the measured capacitance, thus obtaining the true value of the capacitance associated with the unknown impedance.

As this error capacitance is a function of the position of the wiper of $R1$, it is necessary to measure a number of pure (non-reactive) resistances and plot the capacitance error curve.

Use must be made of small, carbon resistors in the range 100Ω to 2kΩ which (since they are practically pure) act as standards.

The error will always be greatest when the voltage applied to $R3$ is maximum and the voltage applied to the standard capacitor $C1$ is minimum. This will be seen to correspond to MULTIPLIER ranges R × 0·1 and C × 0·1 or L × 10 (*see B601 circuit diagram*).

Note: *It is also apparent that connexion of the unknown, no matter which terminals are used, does not affect the error except insofar as the position of* R1 *at balance may be different.*

To plot the error curve proceed as follows:

1 By means of a d.c. bridge select non-inductive carbon resistors of the following values:

100Ω, 120Ω, 150Ω, 180Ω, 220Ω, 330Ω, 470Ω, 680Ω, 820Ω, 1kΩ, and 2kΩ.

2 Set the MULTIPLIER switches to R × 0·1 and C × 0·1.

3 Adjust the source and detector to any convenient frequency between 100 and 500 kc/s.

4 Set the R dial to infinity and the C dial to zero. Adjust the two BALANCE controls for zero output from the detector.

5 Connect the 100Ω resistor between the COMMON and 1·0R terminal. Balance the Bridge by means of the two main dials. Record the final setting of both dials.

6 Repeat step 5 with each of the resistors in turn. The C MULTIPLIER will have to be changed to the L × 10 position for the resistors above 220Ω.

7 Plot the values of capacitance obtained against the main R dial readings on a logarithmic scale, as shown in Fig. 6, marking the curve for MULTIPLIER ranges R × 0·1, C × 0·1.
On the left-hand side *mark clearly* the manner in which the correction is to be applied.

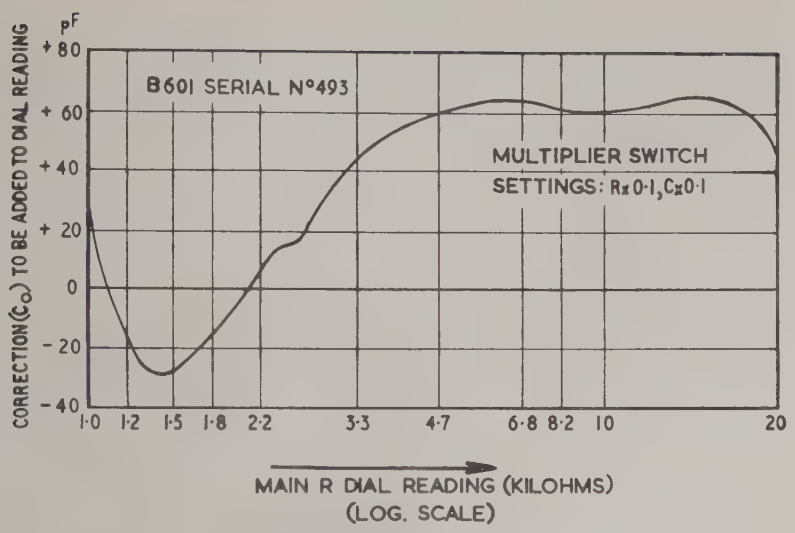

Fig. 6. Typical Correction Curve

The error curve is used as follows:

(*a*) When the R and C MULTIPLIERS are switched to R×0·1 and C×0·1, the correction C_o is obtained from the curve. This quantity is added to the capacitance dial reading, or subtracted from it, according to the sign given on the graph.

(*b*) When the R and C MULTIPLIERS are switched to other ranges, the correction value is given by:

$$C_o' = C_o \times \frac{1}{100 \times R_v C_v} \text{ (for C×10, C×1 and C×0·1)}$$

or

$$C_o' = -C_o \times \frac{L_v}{100 \times R_v} \text{ (for L×0·1, L×1 and L×10)}$$

where R_v, and C_v or L_v are the new MULTIPLIER settings.

(*c*) Example (*figures taken from the curve shown in Fig.* 6):

(i) Suppose the measured value of an unknown impedance (with MULTIPLIERS at R×1 and C×1) is 1·25kΩ and +62pF.

For a dial reading of 1·25kΩ the correction obtained from the curve is (−30pF). This applies to multiplier switch settings of R×0·1 and C×0·1. The correction applicable to R×1 and C×1 is given by:

$$C_o' = C_o \times \frac{1}{100 \times R_v C_v} \text{pF}$$

$$= -30 \times \frac{1}{100 \times 1 \times 1} = -0{\cdot}3\text{pF}$$

The true value of impedance is 1·25kΩ, and 62pF + (−0·3pF) = 61·7pF.

3 MEASUREMENT OF TRANSISTOR PARAMETERS UNDER SMALL-SIGNAL CONDITIONS

3.1 TRANSISTOR EQUIVALENT CIRCUITS

3.1.1 Introduction

Many types of transistor have now been designed using either silicon or germanium as basic materials. Techniques such as diffusion, alloying or growing have been employed and, depending on the 'doping' elements used in the junction, PNP and NPN transistors have been produced.

3.1.2 Common Equivalent Circuits

The characteristics of all transistors are similar, but their parameters (both d.c. and a.c.) differ considerably and depend on the primary design of the junctions. The theory of transistors is beyond the scope of this handbook but, in order to explain the measurement of the parameters, it is necessary to make reference to a number of equivalent circuits. It must be borne in mind that such factors as emitter d.c. current, collector d.c. voltage, temperature, and addition of a.c. signals to d.c. potentials, all affect the parameters.

Similarly, as the emitter current is increased, so the collector current increases and, hence, the collector voltage decreases, once again altering the width of the base and increasing the length of the line. The increase in length of the transmission line causes higher losses and, hence, lower current at the collector terminal. This in turn raises the input impedance at the emitter terminal.

Early* has shown that these effects can be represented by a voltage generator of zero internal impedance placed just before the short-circuit. μ is termed the *Early feed-back factor* and V_c is the voltage across the capacitance C_c'.

When small-signal parameters are measured, it is always possible to secure conditions such that the voltage μV_c is zero (or nearly so). Finally, r_{bb}' represents the ohmic resistance at the junction of the base. The above equivalent circuit is complicated but is the only true representation of the transistor.

The three-terminal bridge method of measurement between emitter, base and collector electrodes will provide, at any one frequency, exact values of

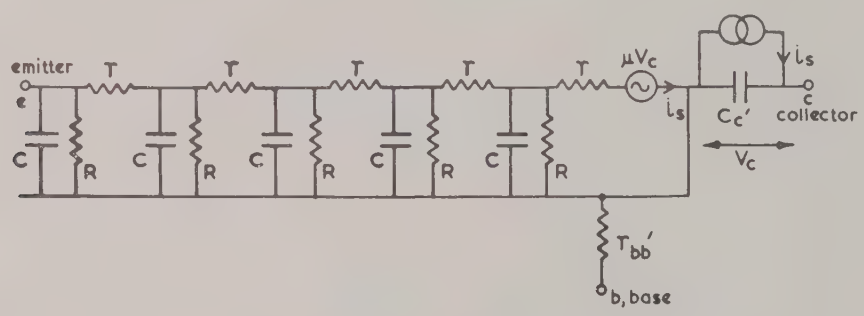

Fig. 7. Exact Equivalent Circuit of Transistor

3.1.3 Exact Equivalent Circuit of the Triode Transistor

This is shown in Fig. 7. A transistor is represented by a transmission line short-circuited at the far end. The short-circuit corresponds to all holes being swept towards the collector. The collector depletion layer is represented by the capacitor C_c'. The emitter depletion layer capacitance is added to the first capacitor of the line. The length of the transmission line corresponds to the width of the base. The width of the base and, hence, the length of the transmission line, varies when the collector depletion layer increases (or decreases), since the collector voltage changes when the a.c. signal is added to the d.c. potential.

the admittances present in the transistor, but it may not be easy to translate these values into the equivalent elements as shown in Fig. 7 owing to the complexity of the transistor itself. In any case, such translation is not absolutely essential to the circuit engineer.

There are simpler circuits in general use, some of which are outlined below, but it must be remembered that when any of the simplified circuits is used, there may be a sizeable discrepancy between the values measured (assuming that the measurement is accurate) and the values as supplied by the manufacturer for the elements of the simplified equivalent circuit.

* J. M. Early: Proc. IRE, Vol. 40, Nov. 1952, pp. 1401-1407.

3.1.4 Simplified Transistor Equivalent Circuits

By a number of simplifications to be found in articles and standard textbooks on the subject of transistors, it is possible to arrive at various equivalent circuits which are very much less complicated than that of Fig. 7. Four simplified basic circuits are described here.

Low-frequency T Circuit

At very low frequencies ($f_{cut\text{-}off}/100$) a transistor in the grounded-base circuit is represented as in Fig. 9 (*a*), and in the grounded-emitter circuit as in Fig. 9 (*b*). In these two circuits the collector and emitter capacitances are omitted, although with suitable measuring equipment (such as Bridge B601 and the adaptors) the measured parameters will be complex.

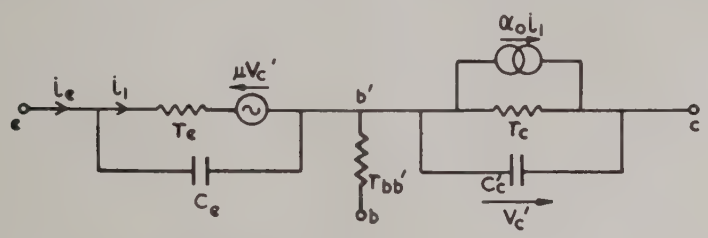

Fig. 8. Grounded-base T Equivalent Circuit

Grounded-base T Equivalent Circuit

This is shown in Fig. 8. This circuit is most useful and hence widely employed by the transistor manufacturer for stating such transistor properties as emitter resistance (r_e), emitter capacitance (C_e), feed-back factor (μ), base resistance ($r_{bb'}$), collector resistanee (r_c), collector capacitance (C_c) and current gain α.

This circuit is sometimes further simplified at very high frequencies by omitting the collector resistance (r_c) and equating the collector current to $\alpha.i_e$.

The Hybrid π Grounded-emitter Circuit

This circuit is now in wide-spread use and provides probably the most precise means for denoting the behaviour of a transistor over the whole useful frequency band. Fig. 10 (*a*) gives the equivalent circuit and Fig. 10 (*b*) a typical set of values for the transistor OC45.

At very high frequencies the resistance $r_{b'c}$ is usually very large compared with the reactance due to $C_{b'c}$ and hence can be omitted. Similarly the

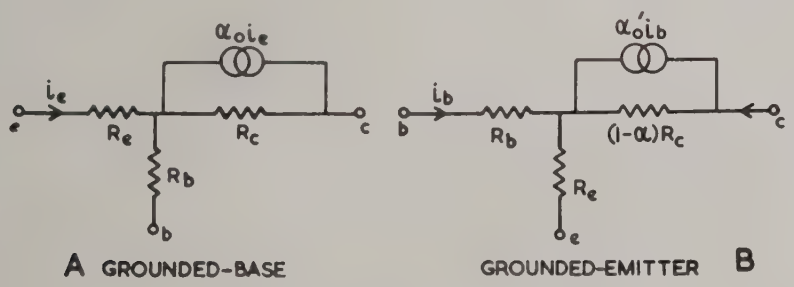

Fig. 9. Low-frequency Equivalent Circuits

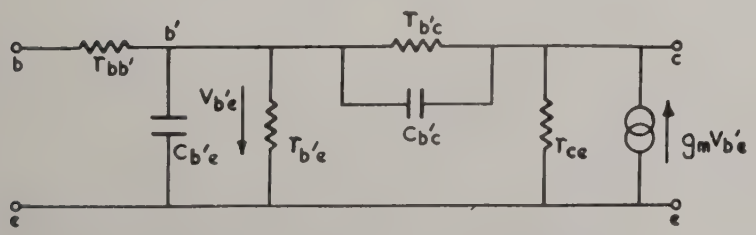

$$C_{b'e} = C_e \qquad C_{b'c} = C_c \qquad r_{b'c} = \frac{r_e}{\mu(1-\alpha_o)}$$

$$r_{ce} = \frac{r_e}{\mu} \qquad r_{b'e} = \frac{r_e}{1-\alpha_o}$$

Fig. 10 (a). Hybrid π Grounded-emitter Circuit

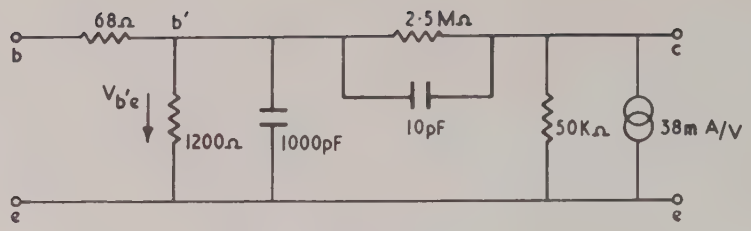

Fig. 10 (b). Typical Values for OC45

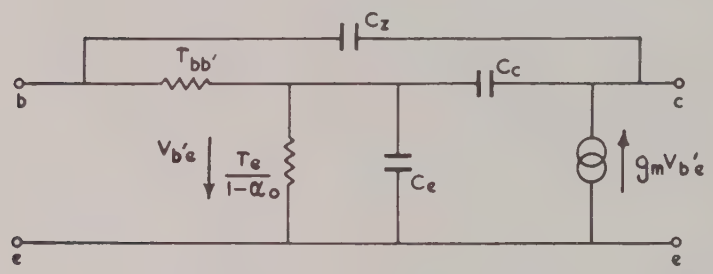

Fig. 10 (c). Very High Frequency Circuit

Early effect can also be omitted. In this instance the equivalent circuit then reduces to that shown in Fig. 10 (*c*). In practice there is always some capacitive coupling directly between the base and collector terminals and this is shown in Fig. 10 (*c*) by C_z.

Note: *The equivalent circuits described in the preceding sections do not take into account collector junction leakage, emitter efficiency, surface effects, etc. In practice, these factors will modify the equivalent circuits slightly.*

3.2 BEHAVIOUR OF TRANSISTOR PARAMETERS WITH D.C. CURRENTS AND VOLTAGES

Some knowledge of the behaviour of the impedances of equivalent circuits in Figs. 7 to 10 can be obtained from the following facts:

1 The emitter resistance r_e can be calculated directly from the expression:

$$r_e = \frac{kT}{q} \cdot \frac{1}{I_e} = \frac{26}{I_e(mA)} \quad \textit{ohms at } 20°\text{C}.$$

Thus the emitter resistance is inversely proportional to the emitter current and directly proportional to absolute temperature.

2 The emitter capacitance is given by:

$$C_e = \frac{q}{kT} \times \frac{W^2}{2D} \cdot I_e$$

This will be seen to be directly proportional to the emitter current and inversely proportional to the absolute temperature.

3 The short-circuit current gain α, which is a function of the product of emitter capacitance and emitter resistance, is independent of the temperature.

4 The base resistance, for small-signal operation, is practically constant.

5 The collector resistance is inversely proportional to the emitter (and hence the collector) current. The collector resistance is also directly proportional to the square root of the collector voltage and is independent of temperature.

6 The collector capacitance C_c' is inversely proportional to the square root of the collector voltage and is independent of temperature.

7 C_o'' represents the reactive component of the transmission line looking back from the collector. This capacitance is directly proportional to the emitter current and inversely proportional to the square root of the collector voltage. It is inversely proportional to the absolute temperature.

8 μ, the Early feed-back factor, is inversely proportional to the square root of the collector voltage and directly proportional to temperature.

9 The value of current gain α (or α') varies with the emitter current and this variation depends entirely on the design of the transistor. Usually, the designer of the transistor will attempt to maintain the value of α constant over a wide range of emitter currents.

Note: *Although the effect of temperature has been mentioned, provided that it remains substantially constant, the overall effect on the parameters of the transistor will be very small.*

To ensure further that this is so, the circuits of the adaptors have been so arranged that the transistor is supplied with d.c. potentials in the grounded-base configuration, in which temperature effects are at a minimum.

3.3 FOUR-TERMINAL NETWORKS

There are three systems used for general analysis of junction transistors, known as 'Z', 'Y' and 'H' parameters.

Since the measuring facility provided by Bridge B601 is essentially one of admittance (driving point or transfer) the discussion is restricted to 'Y' parameters only.

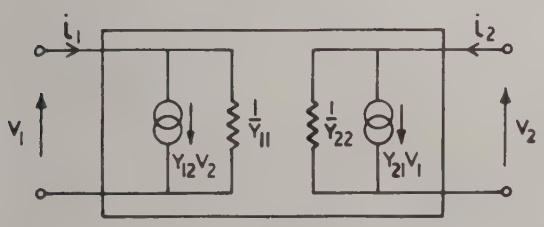

Fig. 11. Definition of 'Y' Parameters of a Transistor

3.3.1 Definition of 'Y' Parameters

Fig. 11 defines the 'Y' parameters of an active four-terminal device. The important fact is that the actual network inside the square is defined in terms of input and output currents and potentials. Thus for an admittance network the following definitions apply:—

Y_{11} is the input admittance with the output short-circuited (i.e. $V_2=0$)

Y_{22} is the output admittance with the input short-circuited (i.e. $V_1=0$)

Y_{12} is the reverse transfer (or mutual) admittance and is the ratio of the short-circuit input current to the output voltage (i.e. when $V_1=0$)

Y_{21} is the forward transfer (or mutual) admittance and is the ratio of the short-circuit output current to the input voltage (i.e. when $V_2=0$)

The equations defining Fig. 11 are:

$$I_1 = Y_{11} \cdot V_1 + Y_{12} \cdot V_2 \quad \ldots \quad \ldots \quad \ldots \quad (1)$$

$$I_2 = Y_{21} \cdot V_1 + Y_{22} \cdot V_2 \quad \ldots \quad \ldots \quad \ldots \quad (2)$$

Equations (1) and (2) do not yet define any specific configuration of a transistor. Since the latter can be used with various electrodes grounded, the following symbols will represent the admittances in the various configurations:

Grounded-base	Y_{11} Y_{22}, etc.
Grounded-emitter	Y_{11}' Y_{22}', etc.
Grounded-collector	Y_{11}'' Y_{22}'', etc.

3.3.2 Grounded-base Circuit

This is defined by:

$$I_1 = Y_{11} \cdot V_1 + Y_{12} \cdot V_2 \quad \ldots \quad \ldots \quad \ldots \quad (3)$$

$$I_2 = Y_{21} \cdot V_1 + Y_{22} \cdot V_2 \quad \ldots \quad \ldots \quad \ldots \quad (4)$$

Further, the short-circuit current gain α (when $V_2 = 0$) is defined by:

$$\left.\begin{aligned} \alpha &= \frac{I_2}{I_1} \text{ at } V_2 = 0 \\ &= \frac{Y_{21}}{Y_{11}} \end{aligned}\right\} \quad \ldots \quad \ldots \quad \ldots \quad (5)$$

Thus if two parameters of equation (5) are known, the third can be computed.

It is possible to measure all the above parameters using B601, and simplified circuits for these measurements are shown in Fig. 12 (*a*). In this the d.c. supplies are omitted, Y_s is the standard admittance as read on the dials, and for simplicity a 1 : 1 bridge ratio is assumed.

The applied potential is E and, as at balance the voltage across the detector transformer is zero, this provides the correct conditions for the measurement of each parameter.

In the case of α measurement, a resistor R provides the transistor with a constant-current feed.

From the above it will be seen that it is not necessary to make five separate measurements and, for convenience, only three adaptors for grounded-base circuits have been designed, namely Y_{11}, Y_{22} and α.

The value of Y_{21} can be computed from equation (5).

3.3.3 Grounded-emitter Circuit

This is again defined by:

$$I_1 = Y_{11}' \cdot V_1 + Y_{12}' \cdot V_2 \quad \ldots \quad \ldots \quad \ldots \quad (6)$$

$$I_2 = Y_{21}' \cdot V_1 + Y_{22}' \cdot V_2 \quad \ldots \quad \ldots \quad \ldots \quad (7)$$

Also:

$$Y_{22}' = Y_{22} \quad \ldots \quad \ldots \quad \ldots \quad \ldots \quad \ldots \quad (8)$$

and the short-circuit current gain is given by:

$$\alpha' = \frac{\alpha}{1-\alpha} \quad \ldots \quad \ldots \quad \ldots \quad \ldots \quad \ldots \quad (9)$$

Values for α' and Y_{22}' are obtained from the measurements mentioned in Section 3.3.2.

To measure admittances Y_{11}', Y_{21}' and Y_{12}' it would be necessary to use the circuits shown in Fig. 12 (*b*). Of these, two practical adaptors have been developed, giving directly the values of Y_{11}' and Y_{21}'. In the case of the latter it was necessary to include a phase-reversing transformer in order to measure negative conductance.

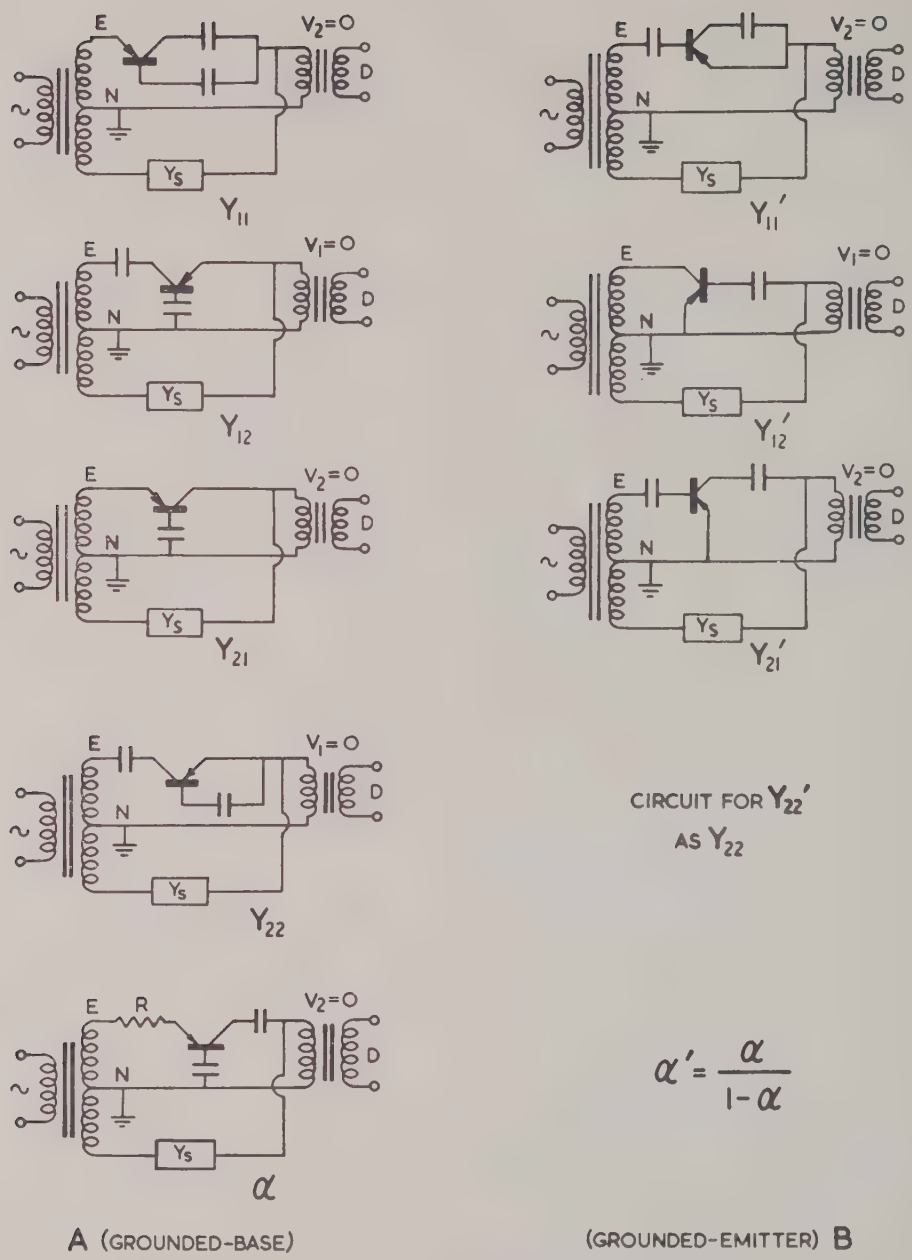

Fig. 12. Simplified Measuring Circuits using Bridge B601

3.3.4 Grounded-collector Circuit

This again is defined by:

$$I_1 = Y_{11}'' \cdot V_1 + Y_{12}'' \cdot V_2 \quad \ldots \quad \ldots \quad \ldots (10)$$

$$I_2 = Y_{21}'' \cdot V_1 + Y_{22}'' \cdot V_2 \quad \ldots \quad \ldots \quad \ldots (11)$$

Also:

$$Y_{22}'' = Y_{11} \quad \ldots \quad \ldots \quad \ldots \quad \ldots \quad \ldots (12)$$

$$Y_{11}'' = Y_{11}' \quad \ldots \quad \ldots \quad \ldots \quad \ldots \quad \ldots (13)$$

$$\alpha'' = \alpha' + 1 \quad \ldots \quad \ldots \quad \ldots \quad \ldots \quad \ldots (14)$$

Note: *Using the above five adaptors, some of the* H *parameters are also directly obtained. These are:*

$$\text{Input impedance } H_{11} = \frac{1}{Y_{11}} \text{ (grounded-base)}$$

$$\text{Input impedance } H_{11}' = \frac{1}{Y_{11}'} \text{ (grounded-emitter)}$$

and, Forward current gain $H_{21} = \alpha$.

3.3.5 Calculation of all remaining Parameters of a Transistor

It will be shown here that having obtained measured values of Y_{11}, Y_{11}', Y_{22}, and Y_{12} (indirectly, via measurement of α) and Y_{21}', all other parameters of the transistor are easily computable.

Matrix of the Transistor Circuit

It has been shown by Shekel* that the transistor can be defined by an indefinite admittance matrix as shown in the following table:

	base b	emitter e	collector c
base b	* Y_{bb} $Y_{11}'=Y_{11}''$ $(Y_{11e}=Y_{11c})$	Y_{be} Y_{12}'' (Y_{12c})	Y_{bc} Y_{12}' (Y_{12e})
emitter e	Y_{eb} Y_{21}'' (Y_{21c})	* Y_{ee} $Y_{11}=Y_{22}''$ $(Y_{11b}=Y_{22c})$	Y_{ec} Y_{12} (Y_{12b})
collector c	* Y_{cb} Y_{21}' (Y_{21e})	** Y_{ce} Y_{21} (Y_{21b})	* Y_{cc} $Y_{22}=Y_{22}'$ $(Y_{22b}=Y_{22e})$

* F. Shekel, 'Matrix Representation of Transistor Circuits'. Proc. IRE, Vol. 40, Nov. 1952, pp. 1493-1497.

A number of suffixes are included to cover the various notations used in England and the U.S.A. for the same admittances. One important property of this matrix is that the sum of every row or column is zero, a simple way of stating the result of Kirchoff's laws. Thus if four selected parameters are measured, the remaining five parameters can be calculated.

The B601 and its adaptors measure the parameters marked * or, if the result of the α measurement is also used, the value of Y_{21} (marked **) is obtained.

Suppose that the value Y_{12}' is to be obtained by computation. In the first instance Y_{12}'' can be calculated from the expression:

$$Y_{12}'' = -(Y_{11} + Y_{21})$$

Using this result, the value of Y_{12}' can be calculated:

$$Y_{12}' = -(Y_{12}'' + Y_{11}')$$

$$= -(Y_{11}' - Y_{11} - Y_{21})$$

Similarly, if Y_{12} is wanted, it is given by:

$$Y_{12} = -(Y_{12}' + Y_{22})$$

$$= -(Y_{22} - Y_{11}' + Y_{11} + Y_{21})$$

4 PRACTICAL ADAPTORS

In the design of practical adaptors the following factors must be considered:

(*a*) Effect of stray impedances arising from series inductances and series de-coupling capacitances and shunt capacitances.

(*b*) Adequate screening must be provided between points to which the transistor leads are connected as well as screening between transistor leads, Bridge terminals and d.c. supply circuits.

(*c*) Effective errors caused by phase shifts associated with d.c. supply circuits.

(*d*) Specific choice of component values in the d.c. supply circuits.

(*e*) Signal (a.c.) levels at which the parameters are to be measured.

In some instances it is not possible to design an adaptor to eliminate all the errors arising from the above-mentioned causes. It is, however, possible to diminish their effect further by a suitable measuring procedure.

Note: *What very often is not appreciated to the full extent is that, with the present construction of transistors, the inductances presented by the leads of these transistors are comparable (at high frequencies) with the values of the parameters which are being measured. The lead inductances must be regarded as a part of the transistor itself.*

4.1 EFFECTS OF STRAY CAPACITANCES

Any stray capacitances should always:

(*a*) be kept to a minimum,

(*b*) appear, whenever possible, across either the input or output transformer of the Bridge.

If appearing across any of the d.c. supply resistors, the phase shift introduced by the stray capacitances must be negligible over the whole band of frequencies.

If appearing across the points to which the transistor has to be connected, the stray capacitances must be 'tuned out' at the initial balance operation, before the transistor is connected for measurement.

Note: *Any stray capacitance (or impedance in general) introduced between the* 'COMMON' *and* 'X' *terminals when the transistor is connected to the Bridge, becomes associated with the transistor itself.*

4.2 EFFECT OF STRAY INDUCTANCES

In order to connect a transistor to the adaptor and the adaptor to the Bridge itself, suitable connectors must be provided. These connectors constitute unwanted inductances which may appear in series with each of the terminals of the transistor and, at high frequencies, will cause an error in measurement. The latter is most serious when the stray inductance is in series with the emitter impedance. In order to reduce unwanted inductances to a minimum, printed circuit boards are used. By keeping the copper tapes as wide as possible and as near as possible to the Neutral plate, the inductance of the leads is kept to a minimum.

The capacitances between the copper tapes and the Neutral plate, although large, are made to appear across the Bridge transformers where they have negligible effect.

4.3 EFFECT OF INADEQUATE SCREENING

When the transistor is connected to the adaptor, it is important to avoid any stray coupling (mainly capacitive) between the 'COMMON' and 'X' terminals and between the transistor connecting block and the adjacent 'X' terminals. A small coupling of, say, 0·1pF between the transistor leads and the terminal 'R×10 L×10 C×0·1' will result in an error of 10pF in measurement if the transistor is actually connected to terminal 'R×0·1 L×0·1 C×10'. To avoid this error, each adaptor has a special type of screen fitted to the top plate which separates the transistor from the 'X' terminals. The same screen separates the 'X' and 'COMMON' terminals from the d.c. supply circuits.

4.4 CHOICE OF DECOUPLING CIRCUITS ASSOCIATED WITH D.C. SUPPLIES

The circuits of the adaptors are designed in such a way that they introduce errors of less than 1 per cent. (whenever possible) in the impedances of the transistor. Over most of the frequency band less than 1 per cent. error is in fact introduced even in the minor component of the impedance, provided that the ratio of major to minor components does not exceed 10: 1. Such accuracy requires circuits with phase shifts of less than $\tan^{-1} 0{\cdot}001$ which in practice is not always possible.

4.5 CHOICE OF SUITABLE COMPONENTS FOR D.C. SUPPLY CIRCUITS

The circuits have been so arranged that the transistor is supplied with d.c. potentials and currents in the grounded-base configuration, in order to minimize temperature effects. This normally

involves two d.c. blocking capacitors which at balance may influence the measurement, since one or both may be either in series with the measured impedance or in series with the short-circuit required in the measurement. Such capacitors must be chosen carefully to have a small impedance over the whole frequency range to be covered. The 8μF capacitors used in the present adaptors had the following typical characteristics:

Frequency kc/s	Reactance ohms	Resistance ohms
15	1·0	2·0
200	0·5	1·5
5,000	0·5	1·0

Requirements for capacitors other than those in series with the transistor leads were less stringent and the choice was decided mainly on their size.

The smallest-size resistors that can operate at the required current levels are used. This permits a compact layout, resulting in low reactance and low shunt reactance. High-stability resistors are used where they form a part of the d.c. current monitoring circuits.

4.6 D.C. SUPPLIES

The circuits are designed to operate from two 18V batteries (or an equivalent external supply) which will provide at least 1mA at 6V to the transistor. The emitter current is measured by means of a microammeter in series with the emitter supply and this should be accurate to better than 1 per cent. Provision is made for measuring the collector-to-base voltage on an external microammeter (*see later text*).

4.7 A.C. SIGNAL LEVELS

The maximum permissible signal to the Bridge depends on which parameter of the transistor is being measured. The best procedure is to repeat measurements of the parameter at steadily reduced signal levels to B601 (*see also further paragraphs*) until there is no change in the Bridge readings. With an average OC44, OC45 or similar transistor, with an emitter current of 1mA d.c. and a collector voltage of 6V d.c., the required a.c. signal input to B601 for measurement of the various parameters is approximately:

Y_{11} Y_{11}' and Y_{21}'	10mV	r.m.s.
Y_{22}	0·5V	,,
α	1V	,,

4.8 MECHANICAL DESIGN

The five adaptors have a number of common mechanical parts such as the cover, leads, connecting block, terminals, top and bottom NEUTRAL plates, etc., and all of them are approximately $7\frac{1}{4}$ in. long, $1\frac{7}{8}$ in. wide and $1\frac{3}{4}$ in. high.

Each adaptor has its own double-sided printed circuit, to which the components and connexions are soldered. When stray capacitances must be reduced to low values across some of the components, the copper board is suitably etched away on one or both sides. The areas of copper not used for connexions are all connected to the NEUTRAL terminal. This further reduces stray inductances and capacitances (except to NEUTRAL, where they do no harm).

The connexions to the Bridge are made using long screw-in terminals. These have metal inserts at the bottom end only to avoid any unwanted coupling between the Bridge terminals. The copper boards are silver-plated and, where the screw-in terminals press on the silver, a thin flash of rhodium is provided to give a hard-wearing surface.

The connexions to the Bridge X terminals are made from the top of the copper board only. Holes are cut in the lower silver-plated brass plate to prevent the COMMON and X terminals being shorted together. A thin plastic cover forms the insulated base of the adaptor.

The lower silver-plated brass plate serves as the connexion between the NEUTRAL and EARTH terminals. The top brass plate, carrying the screen between COMMON and X terminals, is also connected to NEUTRAL.

The transistor connecting clips are built into the paxolin block. Each clip is spring-loaded independently, ensuring that all leads of the transistor are gripped firmly. The connexions are kept as short as is possible consistent with sound engineering design. The transistor clips are marked 'e' for emitter, 'b' for base, 's' for screen and 'c' for collector. The screen clip is connected to NEUTRAL and shields the collector, minimizing the capacitive coupling from the emitter. The circuit components are soldered directly onto the silvered plates of the printed circuit, giving the shortest possible connexions. The components are mounted as near as possible to NEUTRAL to reduce any circulating currents, which would give rise to errors. Since most of the capacitors have metal cases, Empire Cloth of 0·01 in. thickness is used to insulate them from the copper board.

The supply and voltmeter leads are taken from points at the Earth-terminal end of the adaptor. This allows the leads to be clamped firmly to the adaptor.

The printed circuit board and the brass plates (top and bottom) are bolted together with nylon bolts. This eliminates the need for insulating washers.

The adaptors fit the top of the Bridge. The method of connexion is described in detail later.

5 DESIGN OF INDIVIDUAL ADAPTORS

Before the circuit for measuring any parameter of a transistor can be designed, it is necessary to know an approximate expression (as derived from the equivalent circuit and/or physical constants) for the parameter, and the expected order of admittance to be measured.

From this knowledge the maximum effective impedances in series with the transistor can be estimated and the design arrived at. Effects of leakage currents and phase shifts are next considered and the circuit modified into its final form.

5.1 INPUT ADMITTANCE IN GROUNDED-BASE CONFIGURATION (Y_{11}) (Q601B)

The admittance Y_{11} is given approximately by:

$$Y_{11} = \frac{1}{Z_e + (1-\alpha)r_{bb}'}$$

where Z_e is the emitter impedance.

Since Z_e is low, no component may be connected directly in series with the emitter. Fig. 21 gives the circuit developed for the measurement of this parameter. The d.c. blocking capacitors are in series with collector and base, where a higher series reactance than in the emitter circuit can be tolerated.

The adaptor includes various CR circuits and these have widely differing time-constants to prevent low-frequency oscillations.

A slight phase-shift is produced by C_2R_2 and C_1R_6, but this is not really important. A reactance $(1-\alpha)\ X_{C1}$ is added to the transistor impedance, but this can usually be neglected. The stray inductance in series with the transistor is kept very low (about 0·02μH). Stray capacitances across high-value resistors also are kept low.

5.1.1 Accuracy (Y_{11}) (Q601B)

The accuracy is limited mainly by C_1 in series with the base. This does not affect the reactive component of the impedance by more than 1 per cent. (the ratio of resistive to reactive components of the impedance is then about 10: 1) at about 200 kc/s. This error remains constant up to about one-half of the alpha cut-off frequency. (With transistors such as the OC44 or OC45, the cut-off frequency is about 7-15 Mc/s. When other types of transistor are being measured, the effect of C_1 must be considered against the characteristics of that type). The error in the resistive component and, hence, for all practical purposes in the impedance, is less than 1 per cent. up to 5 Mc/s.

5.1.2 Operating Instructions (Y_{11}) (Q601B)

1 Place the adaptor on top of B601; screw in the EARTH, NEUTRAL and COMMON terminals.

2 At an emitter current of approximately 1mA and a collector voltage of −6V d.c., an impedance of the order of 30Ω will be measured. Hence, the terminal x0·1R should be used. The Bridge window multipliers should be set to x0·1R and x0·1C. The final choice, especially if different d.c. levels are applied to the transistor, will have to be made during measurement.

3 Connect the adaptor leads to the Control Unit and the meter leads to a 150-μA meter. This will indicate the collector-base voltage and full-scale deflection corresponds to 15V d.c. The meter is fully decoupled to r.f. and should be either left in circuit during the measurement or replaced by a short-circuit.

DO NOT SWITCH ON CONTROL UNIT UNTIL TRANSISTOR IS CONNECTED AS IN PARA. 7 BELOW.

4 Connect a meter of 150μA f.s.d. to the jack socket of the Control Unit marked 'MONITOR'. The meter should have a resistance (made-up if necessary) of 1500Ω ± 50Ω. This will indicate an emitter current of 1mA ± 0·5 per cent. at 66·7 per cent. of full-scale deflection.

5 Tune-in the source and detector to the frequency required in measurement.

6 Using the TRIM R and C controls of the Bridge, balance the Bridge for null.

7 Insert the transistor into the sockets of the terminal block. (Press the top button to open the holes which accept the transistor leads.)

8 Switch on the control unit. Adjust the EMITTER SET CURRENT knob for an emitter current meter reading of 1mA (or the required value). If a low value of emitter current is required, set the switch to LOW.

Adjust the COLLECTOR SET VOLTS knob for a collector voltage meter reading of 6V (or the required value). If a low value of collector voltage is required, set the switch to LOW.

9 If an external attenuator on the source is available, check that the input voltage to the Bridge (under open-circuit condition) is approximately 10mV.

10 Balance the Bridge for null and record the reading of the R and C dials.

11 Reduce the input voltage to the Bridge by a small amount (say 3dB), balance the Bridge again and record the reading of the R and C dials. If these are the same as in step 10, then the true value of Y_{11} has been measured.

12 If the values of R and C have changed at step 11, it will be necessary to reduce the input signal to the Bridge again, until constant reading values are obtained. The latter give the component values of Y_{11}.

5.2 OUTPUT ADMITTANCE IN GROUNDED-BASE CONFIGURATION (Y_{22}) (Q601C)

The admittance Y_{22} is given by the expression:

$$Y_{22} = \frac{Y_c + \mu g_e + r_{bb}'(Y_c g_e + Y_c Y_e + \mu Y_e g_e)}{r_{bb}'(Y_c + Y_e) + 1}$$

where

$$Y_c = \frac{1}{r_c} + j\omega C_c$$

$$g_e = \frac{1}{r_e}$$

$$Y_e = \frac{1}{\alpha' r_e} + j\omega C_e$$

Analysis shows that the emitter impedance is of major importance at all frequencies and that the base resistance plays an important part at medium frequencies. The circuit of the adaptor is shown in Fig. 20. Two capacitors, connected in parallel, are used in series with the base to keep accuracy high. The capacitor C_3 has a negligible effect over the whole frequency band since the transistor admittance is low. It is necessary to ensure that when the transistor is inserted the extra stray capacitance introduced between the transistor terminals is very small, preferably not more than 0·05 to 0·1pF.

This extra capacitance is mainly between the collector lead and the components connected to the base and emitter connecting points. A large part of this stray capacitance can therefore be eliminated by carrying out the initial Bridge balance with the collector of the transistor connected, but with the base and the emitter leads moved well away from the adaptor. Other stray capacitances are kept low in value and most of the phase-shifts can be neglected. The inductances in series with the emitter and base are kept low.

5.2.1 Accuracy (Y_{22}) (Q601C)

The error in both components of the measured admittance is less than 1 per cent. over the whole of the frequency range.

5.2.2 Operating Instructions (Y_{22}) (Q601C)

1 Place the adaptor on top of B601; screw in the EARTH, NEUTRAL and COMMON Terminals.

2 At an emitter current of approximately 1mA and a collector voltage of —6V d.c., the impedance measured will be high (50kΩ to 1MΩ). Thus the x10R terminal may have to be used. The window multipliers should be set initially to x10R, x10C and subsequently adjusted, if necessary, to obtain the highest reading accuracy.

3 Connect the adaptor leads to the Control Unit and the meter leads to a 150-μA meter. This will indicate the collector-to-base voltage and full-scale deflection corresponds to 15V d.c. The meter is fully decoupled to r.f. and should be either left in circuit during the measurement or replaced by a short-circuit.

DO NOT SWITCH ON CONTROL UNIT UNTIL TRANSISTOR IS CONNECTED AS IN PARA. 7 BELOW.

4 Connect a meter of 150μA f.s.d. to the jack socket of the Control Unit marked 'MONITOR'. The meter should have a resistance (made-up if necessary) of 1500Ω ± 50Ω. This will indicate an emitter current of 1mA ± 0·5 per cent. at 66·7 per cent. of full-scale deflection.

5 Tune-in the source and detector to the frequency required in measurement.

6 Insert the collector lead of the transistor into the block socket, but keep the emitter and base leads well away from the adaptor.

Using the Bridge TRIM R and C controls, balance the Bridge for null.

7 Insert the emitter and base leads into the block. Do not disturb the original collector lead position.

8-12 Proceed as in steps 8 to 12 of 5.1.2.

5.3 GROUNDED-BASE CURRENT GAIN (α) (Q601D)

The basic circuit for measuring α is shown in Fig. 13 (*a*). If the resistor R is made much larger than the transistor input impedance, then:

$$\text{Emitter current} \quad i_e = \frac{E}{R}$$

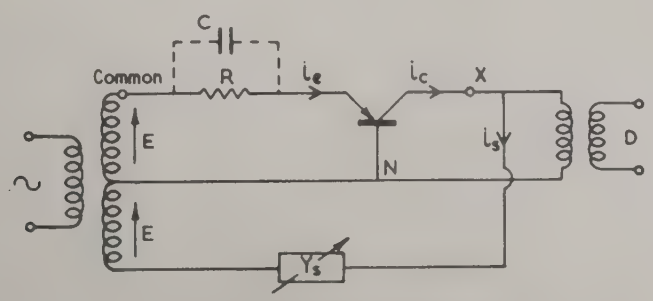

Fig. 13 (a). Basic α Circuit

Collector current $i_c = \alpha i_e = \alpha \dfrac{E}{R}$

where α is the short-circuit current gain of the transistor in the grounded-base configuration:

The Standard current $i_s = E \times Y_s$

where $$Y_s = \frac{1}{R_s} + j\omega C_s.$$

At balance $i_s = i_c$

$$\therefore \alpha = \frac{R}{R_s} + j\omega C_s R$$

$$\alpha = \alpha_r - j\alpha_x = \frac{R}{R_s} + j\omega C_s R$$

In practice the resistance R is never pure and has a stray capacitance C across it. This can be allowed for by adopting the following measuring procedure and using the revised expressions for α. The derivation of these expressions is given in Appendix I.

1 At every frequency the Bridge is first balanced for null using the TRIM R and C controls.

2 A very short piece of wire is inserted between the emitter and collector sockets and the Bridge is balanced for null using the main resistance and capacitance dials. The true values of R and C are recorded.

3 The transistor is inserted in the sockets, d.c. supplies adjusted as required and the measurement of α carried out. The values of R_s and C_s are recorded. The value of α is then computed from the equations:

Real part of α, $$\alpha_r = \frac{R}{R_s}\left(1 + \omega^2 C C_s R R_s\right) \quad (15)$$

Imaginary part of α,

$$\alpha_x = -\omega C_s R \left(1 - \frac{C}{C_s} \times \frac{R}{R_s}\right) \quad \ldots \quad \ldots (16)$$

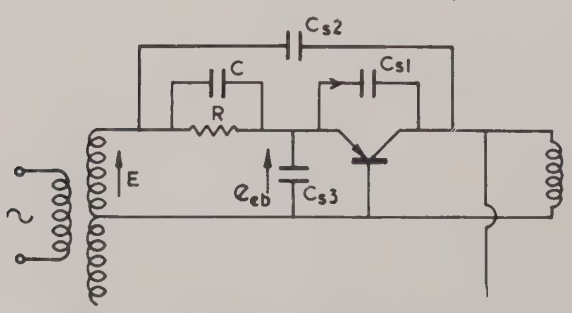

Fig. 13 (b). Main Stray Capacitances in α Circuit

Example

At a frequency of 1Mc/s values obtained in step 2 were:

$R = 10\text{k}$ $\quad C = 0{\cdot}5\text{pF}$

In step 3 values obtained were:

$R_s = 10{\cdot}8\text{k}$ $\quad C_s = -5\text{pF}$

Using equations (15) and (16) to obtain true values,

$$\alpha_r = \frac{10}{10{\cdot}8}\left[1 + \left(4\pi^2 \times 10^{12} \times \frac{(0{\cdot}5)\times(-5)}{10^{12}\times 10^{12}} \times 10^4 \times 10{\cdot}8 \times 10^3\right)\right]$$

$$= \frac{10}{10{\cdot}8}\left(1 - 0{\cdot}01066\right)$$

$$= \frac{9{\cdot}8934}{10{\cdot}8}$$

$$= 0{\cdot}916$$

$$\alpha_x = -2\pi \times 10^6 \times \frac{(-5)}{10^{12}} \times 10^4 \left[1 - \frac{0{\cdot}5}{(-5)} \times \frac{10}{10{\cdot}8}\right]$$

$$= 0{\cdot}314\,[1 + 0{\cdot}0926]$$

$$= 0{\cdot}314 \times 1{\cdot}0926$$

$$= 0{\cdot}343$$

$$\therefore \alpha = \alpha_r - j\alpha_x = 0{\cdot}916 - j0{\cdot}0343$$

Note: *The above procedure has the additional advantage of reducing the Bridge error to a negligible amount, since the only possible error is in the ratio of R to R_s and, as $\frac{R}{R_s}$ tends to unity, calibration of the Bridge and its standard can produce an error of the second order only.*

In practice, the characteristic of the internal alpha may be required and it is therefore necessary to correct the result obtained on the Bridge, not only for the stray capacitance C, but also for the effects of the base resistance r_{bb}' and the collector capacitance C_c. These values must be known. In this case the equations to be used are:

Real part of internal α,

$$\alpha_r^o = \frac{R}{R_s}\left(1 + \omega^2 C C_s R R_s - \omega^2 C_c C_s r_{bb}' R_s\right) \quad (17)$$

Imaginary part of internal α,

$$-\alpha_x^o = \omega C_s R\left(1 - \frac{C}{C_s}\cdot\frac{R}{R_s} + \frac{C_c}{C_s}\cdot\frac{r_{bb}'}{R_s}\right) - \omega C_c r_{bb}' \quad (18)$$

For the full derivation see Appendix II.

In addition to the capacitance across R_1 the effect of 3 more capacitances must be considered. These are shown in Fig. 13 (*b*).

It will be clear that C_{s3} must be small and, for an error of 0·5 per cent. or less at 5 Mc/s, C_{s3} should not exceed 5pF. This is achieved in the adaptor by etching away the surplus copper around the emitter connexion and by cutting away the copper plate underneath.

The capacitance C_{s2} between the COMMON and X terminals is made small (less than 0·2pF) by suitable layout.

The capacitance C_{s1} between the emitter and collector terminals is not easily reduced to less than 0·5pF. Up to 0·5 Mc/s, the error introduced is negligible.

Above this frequency, the following reasoning leads to a method of measurement which reduces the error to a negligible amount.

When the transistor is out of the circuit for the initial Bridge balancing procedure, the current through the capacitance C_{s1} is given by:

$$i_{C_{s1}} \simeq Ej\omega C_{s1}$$

When the transistor is inserted and the Bridge balanced again, the voltage applied is much lower than E, say e_{eb}.

The current then is given by:

$$i_{C_{s1}}' = e_{eb}j\omega C_{s1}$$

which is very much smaller than the previous value.

Suppose, however, that the initial balance is carried out with the collector lead of the transistor disconnected and moved well away from its connecting point, but with the emitter lead in the socket and with the emitter d.c. current left on. In this case the voltage at the emitter although not exactly equal to e_{eb} (since the collector influence is removed) will however be very nearly so and the current at the initial balance, $i_{C_{s1}}''$, will be given by:

$$i_{C_{s1}}'' = e_{eb}'j\omega C_{s1} \simeq i_{C_{s1}}' = e_{eb}j\omega C_{s1}$$

By adopting this method, the original error is reduced at least tenfold.

The complete circuit of this adaptor is shown in Fig. 23. The phase-shifts introduced by C_1R_1 and C_2R_2 are allowed for when measuring R and C.

5.3.1 Accuracy (α) (Q601D)

The accuracy in the measurement of α, when the corrections for the effective stray capacitance C across the series resistor R_1 have been made, and the operating instructions followed closely, is to better than 1 per cent up to 1 Mc/s and better than 2 per cent up to 5 Mc/s.

5.3.2 Operating Instructions (α) (Q601D)

The procedure is similar to that for other measurements (such as Y_{11}) and, consequently, only a summary is given below.

1 Without the transistor connected, balance the Bridge for null in the normal manner.

2 Short-circuit the EMITTER and COLLECTOR terminals and measure the values of R and the shunt capacitance C.

3 Insert the transistor emitter and base leads, but keep the collector lead well away from the adaptor. Switch on the d.c. supplies and adjust the emitter current to 1mA (or the required value). Balance the Bridge for null, using the TRIM R and C controls. This allows for C_{s1}.

4 Insert the collector lead, adjust the collector supply as required (and readjust emitter current to 1mA, as may be necessary) and balance the Bridge, obtaining the values of standards R_s and C_s.

5 Using equations (15) and (16) or (17) and (18), calculate α.

5.4 INPUT ADMITTANCE IN GROUNDED-EMITTER CONFIGURATION (Y_{11}') (Q601A)

The approximate expression for Y_{11}', derived from the equivalent circuit, is given by:

$$Y_{11}' = \frac{1}{r_{bb}'+\alpha' Z_e}$$

where Z_e is the emitter impedance.

From the above it will be seen that the emitter impedance is of major importance in determining Y_{11}'. Thus no component should be placed in the emitter lead.

It is also important that the inductances in series with the emitter and the base are small. This is covered in Appendix III.

The layout is so designed that the capacitor C_1 (*see Fig.* 22) is connected directly across the points to which the emitter and collector leads are connected.

The phase angles introduced by the components associated with the d.c. supplies are negligible. Appendix IV gives a full analysis of the circuit and outlines the design procedure adopted.

In all cases the phase angle introduced by the various circuits does not exceed $\tan^{-1} 0{\cdot}001$.

No trouble is experienced with stray capacitances, since the transistor impedance is low.

5.4.1 Accuracy (Y_{11}') (Q601A)

At low frequencies the main limit to the accuracy is the reactance of C_2. At 15kc/s the error in the results for a typical OC45 transistor is approximately 1·5 — 2 per cent in the reactive component and is negligible in the resistive component. (At this point the ratio of the resistive to the reactive component is greater than 10: 1.) Over the frequency range 50kc/s to 1Mc/s the error in both components is negligible. At 5Mc/s, due to the cumulative effects of the impedance of C_2, the series inductance of the adaptor, and the series inductance of the Bridge itself, the error in the

reactive component will increase to about 5 per cent while that in the resistive part will increase to about 2 per cent. The errors can be determined and the results corrected by measuring standard components, e.g. 1 per cent resistors and capacitors, on the Bridge.

5.4.2 Operating Instructions (Y_{11}') (Q601A)

These are exactly as for Y_{11} measurements but, since the values measured will be of the order of a few hundred to about two thousand ohms, the terminals used will be:
x1R, x1C and the range (window) multipliers x0·1R or x1R and x10C or x1C.

5.5 TRANSFER ADMITTANCE IN GROUNDED-EMITTER CONFIGURATION (Y_{21}') (Q601E)

The admittance Y_{21}' is given approximately by the expression:

$$Y_{21}' = \frac{-\alpha' Z_e}{r_e(r_{bb}'+\alpha' Z_e)}$$

The emitter impedance, Z_e, is of major importance in determining this parameter and therefore no component should be connected directly in series with the emitter. Although the resistive component Y_{21}' is positive according to the four terminal network theory outlined in 3.3, where the output current is measured flowing into the output terminal, so far as bridge measurement is concerned it is negative. The resistive component of Y_{21}' cannot therefore be measured directly on the bridge. To overcome this, a phase-reversing transformer is used in the adaptor. This transformer is designed to operate over the whole frequency range of the Bridge. At high frequencies the resistive component of Y_{21}' becomes positive and, as this may happen within the range of the Bridge, a miniature switch for bypassing the transformer has been provided. At the low frequency extreme of the Bridge range the impedance of the major component is 1 per cent of that of the minor component, so particular care has been taken to minimize spurious phase-shifts of the input voltage to the transistor. The circuit used is shown in Fig. 24. The d.c. blocking capacitors are in series with the base and collector. The capacitor C_2 only affects the results by virtue of the fact that in conjunction with R_5 it introduces a small phase shift. The capacitor C_1, in conjunction with the transistor input impedance in parallel with R_2 and R_3, introduces a phase-shift that must be corrected for at low frequencies. The components in the collector supply network can form a feedback network giving rise to a low-frequency oscillation. This is avoided by making the time constants of the various phase-shifting components in the feedback loop widely different.

5.5.1 Phase-reversing Transformer

The transformer is required to operate over the frequency range 15kc/s to 5Mc/s. The turns ratio is exact and the transformer very small, mounted within the adaptor.

For correct low-frequency operation a high shunt inductance is required so that its load effect on one side of the Bridge voltage transformer is small. Also the ratio of shunt inductance to transformer winding series resistance is as large as possible to minimize the phase-shift which causes errors in C_{21}'.

The need at high frequencies is for low leakage inductance. This is particularly essential for the measurement of Y_{21}' since at high frequencies the base resistance, r_{bb}', shunts the transformer. Leakage inductance gives a phase-shift in the input voltage which can cause errors in R_{21}', the minor component. Coil capacitance is not important since it is balanced out on initial balance.

A ring core is used to minimize leakage inductance. The primary winding is of low resistance, introducing errors in C_{21}' of less than 1 per cent at frequencies above 40kc/s. For minimum leakage inductance in the secondary, only a small number of turns which are evenly distributed round the ring core over the primary are used. The toroidal core simplifies the accurate establishment of a 10: 1 turns ratio.

5.5.2 Accuracy (Y_{21}') (Q601E)

Since Y_{21}' is a low impedance measurement, stray capacitance can usually be ignored. Stray inductance in the base and emitter connexions must be kept as low as possible, so the transistor and transformer are located close together and near to the NEUTRAL terminal.

Over the frequency range 40kc/s to 2Mc/s the errors outlined below are small and can be neglected.

At low frequencies errors in C_{21}' occur due to slight phase shifts caused by the transformer primary resistance (r_c) and the base blocking capacitor (C_1), its reactance not being negligible compared with the transistor input resistance. These make the Bridge measurement of C_{21}' low and, to correct this, a capacitance must be added whose value is given by:

$$C_{error} = \frac{10(L_p+r_c\ R_{in}\ C_1)}{\omega^2\ L_p\ R_{in}\ C_1\ R_s} \quad (see\ Appendix\ V)$$

At high frequencies the inductance in the base connexions and the transistor input impedance form a potential divider giving a phase-shift to the input voltage. The error appears as a positive resistance equal to $R_{error}=R_{11}'/\omega^2 C_s$l in parallel with the negative R_{21}', making the standard resistor read high. R_{21}' is given by:

$$\frac{R_s}{10\left(\dfrac{R_s}{R_{error}}+1\right)} \quad (see\ Appendix\ VI)$$

For precision measurements above 2Mc/s it is advisable to use the above formula. Some stray inductance is due to the transistor leads and will be included in the values measured by the Bridge.

The main error independent of frequency is the stray capacitance of the standard resistance. The elimination of this error is described in Section 2.4. The final source of error is stray inductance in series with the emitter, which is minimized by connecting the transformer secondary winding as near to the emitter as possible.

5.5.3 Operating Instructions (Y_{21}') (Q601E)

The procedure is similar to that given in 5.1.2 for the Y_{11} adaptor. The correct setting of the switch associated with the phase-reversing transformer will depend on the frequency at which measurements are being made. When pushed to the rear position (+), the transformer is bypassed. When the switch is in the forward position (—), the transformer is brought into circuit. If no balance occurs at any setting of the R dial, the switch on the adaptor should be moved to the alternative position. It will then be necessary to change the C MULTIPLIER switch setting to the corresponding range of opposite sign. These ranges are:

C × 10 and L × 0·1

C × 1·0 and L × 1·0

C × 0·1 and L × 10

When the bridge readings are obtained, corrections must be applied as detailed in preceding paragraphs.

Note: *The Y_{11}' and Y_{21}' adaptors are of particular interest to engineers concerned with assessing the correctness of the hybrid π equivalent circuit. Given values of α', r_{bb}', f_{co}, C_c and f_1 (f_1 = frequency at which $R_e(\alpha) = \alpha_o/2$ $\simeq$,, ,, ,, $|\alpha'| = 1$) values for Y_{11}' and Y_{21}' can be predicted. Actual measurement of these two parameters will reveal any discrepancy between the equivalent circuit and the real behaviour of the transistor.*

5.5.4 Interpretation of Bridge Readings

It should be noted that when the transformer T1 (see fig. 24) is switched in, i.e. when the switch is in the forward position (—), the bridge reading of parallel resistance obtained is 10 times *higher* than the measured resistance and the sign is reversed by the transformer. Thus, if R_s is the reading of the bridge, the value of R_{21}' is given by:

$$R_{21}' = \frac{R_s}{10}$$

Similarly, the capacitance reading of the bridge is 10 times lower in this position of the transformer switch. Thus, if C_s is the reading of the bridge, the value of C_{21}' is given by:

$$C_{21}' = 10.C_s$$

The phase-reversing transformer causes the positive capacitance C_{21}' to be read as negative capacitance, i.e. the bridge multiplier (window) has to be set to one of the L ranges. In the equation for C_{21}', the value of C_s has to be taken with negative sign if the bridge multiplier is set to one of the L ranges.

Note When the switch is in the positive position the bridge reads negative values of Y_{21}'.

5.6 GROUNDED-EMITTER CURRENT GAIN (α')

Two effects have to be considered if α' is to be measured using the technique described in 5.3.

1 The value of the resistor R in series with the base would have to be very high. In this case there might be considerable loss of sensitivity resulting in much lower accuracy of measurement.

2 A small stray capacitance C, see fig. 13 (a), is always present across the resistance R. Even in the best design of the adaptor, the value of this capacitance is of the order of 0·5 to 1μμF. At frequencies of 1 Mc/s and above, the emitter current is governed by the reactance of this capacitance rather than by the resistance R. The bridge readings would then require very large corrections and the accuracy of measurement would be low.

Two alternative methods of arriving at the value of α' can be used which avoid these difficulties.

5.6.1. α less than 0·9

It is not difficult at radio frequencies to design an adaptor for α having a value of R of 10kΩ. Small corrections for the effects of the stray capacitance, C, shown in fig. 13 (a), are included in the equations for the real and imaginary parts of α, i.e. α_r and α_x. See Appendix 1. The precise value of R and C are measured beforehand by short-circuiting the emitter (e) and collector (c) terminals and they are used in the computation of α_r and α_x. The full circuit of the adaptor has been shown in fig. 23, and the measurement of α is fully described in 5.3.

From the measurement of α the value of α' is calculated using the formula $\alpha' = \frac{\alpha}{1-\alpha}$. This procedure gives reliable results as long as the value of α is less than 0·9. If this is not so, a small measurement error $\Delta\alpha$ in α will give rise to a large error $\Delta\alpha'$ in α' since it can be shown easily that

$$\frac{\Delta\alpha'}{\alpha'}\% \cdot \alpha'\frac{\Delta\alpha}{\alpha}\%$$

5.6.2. α greater than 0·9

For transistors with α higher than 0·9 it is more reliable to calculate the value α' from the relation

$\alpha' = \dfrac{Y_{21}'}{Y_{11}}$ which follows directly from the equations (6) and (7) of 3.3.3. In this case two adaptors are required, one for the input admittance the other for the forward transfer admittance. Each of these parameters can be measured to better than 2 per cent over the frequency band 15kc/s to 5Mc/s, ensuring that the value of α' is derived to an accuracy of better than 4 per cent. The latter is more than adequate for all practical purposes.

The measurement of Y_{21}' and Y_{11}' has been described fully in 5.4. and 5.5.

5.7 REVERSE TRANSFER ADMITTANCE IN GROUNDED-EMITTER CONFIGURATION Y_{12}'

The admittance Y_{12}' derived from the transistor equivalent circuit is given by an approximate expression:

$$Y_{12}' \simeq \frac{\mu}{(1+\alpha')Z_e}$$

Direct measurement is possible because the signs are positive. However, due to convention, they are reversed for insertion into the formula.

5.7.1. Use of Y_{21}' Adaptor (Q601E)

Although no adaptor is available for Y_{12}' measurement use can be made of the Y_{21}' adaptor described fully in para. 5.5.

The adaptor is placed on top of the bridge after turning it through 180° in the horizontal plane. The transistor terminals on the adaptor are then facing towards the back of the bridge. The NEUTRAL, x10R&L x0·1C, COMMON and EARTH terminals of the adaptor are screwed in according to the engraving on the adaptor to make the following connections:—

1 NEUTRAL of the adaptor to EARTH of the bridge, and EARTH of the bridge to NEUTRAL of the adaptor. These connections can be made because the NEUTRAL and EARTH terminals of the adaptor are connected together.

2 COMMON of the adaptor to x10R&L x0·1C of the bridge and x10R&L x0·1C of the adaptor to COMMON of the bridge. The base and collector connections of the transistor are then reversed, the base being fed from the x10R&L x0·1C terminal of the bridge and the collector from the COMMON terminal of the bridge. Since the value of R_{12}' will not fall below 10kΩ the bridge terminal x10R&L x0·1C is the correct setting for these measurements.

Because the terminals are not central in the window in the wooden cover to the bridge, it is necessary to lift the cover to place the adaptor on top of the bridge in the reversed position described. Alternatively, four special extension terminals can be made which have an inner thread and an extension threaded portion. The extension terminal can then be screwed on to the bridge terminals and the adaptor terminals screwed on to the threaded extension. In this way the adaptor is raised above the wooden top cover of the bridge.

5.7.2. Operating Instructions Y_{12}'

1 Place the adaptor on the top of the bridge with the transistor terminals facing the back of the bridge, see 5.8.1.

2 Screw in the four adaptor terminals EARTH, NEUTRAL, COMMON, x10R&L x0·1C.

3 Set the transformer switch to the rear position (+).

4 Set the bridge window multipliers to 10R or 1xR and 10C, 1C, or 0·1C as required in any particular measurement.

5 Adjust the input signal to the bridge to give a reasonable sensitivity at balance.

6 Using the BALANCE R and C controls, balance the bridge for null.

7 Insert the transistor into the adaptor and set the D.C. emitter current and collector voltage to the required values.

8 Using the main R and C dials, balance the bridge for null and record the readings as R_s and C_s.

9 Reduce the signal level by a small amount and check that the readings are unchanged. A change in the readings indicates that the input signal is overloading the bridge and should be reduced.

If R_s is the reading of the bridge, the value of R_{12}' is given by:

$$R_{12}' = -R_s$$

Similarly if C_s is the bridge reading, then the value of C_{12}' is given by:

$$C_{12}' = -C_s$$

Where

$$Y_{12}' = \frac{1}{R_{12}'} + j\omega C_{12}'$$

5.7.3. Accuracy (Y_{12}')

Accuracy of measurement of the order of 5 per cent up to 5 Mc/s is possible provided that suitable discrimination can be obtained on the dial.

The main error which is independent of frequency is the stray capacitance connected with the potentiometer wiper and its elimination is described in Section 2.4.

5.8 D.C. CONTROL UNIT

In the five adaptors discussed, the d.c. power is supplied to the transistor under test through fairly high resistors. Therefore, if the transistor is removed with the supplies switched on, the voltages between the transistor connecting points rise. This rise may be sufficient to damage the electrolytic capacitors. If the transistor is connected to the adaptor and the emitter current is switched off, the collector-base voltage will rise, perhaps sufficiently to damage the transistor. This may easily occur when inserting or

removing an emitter current meter. To minimize these risks a D.C. Control Unit was designed. The circuit is shown in Fig. 25.

The ON-OFF switch, S1, has three electrical positions but is located by the mechanism either in position 1 or in position 3. The contacts in position 2 are provided in order to introduce a slight delay between switching on the emitter current and the collector voltage, which allows time for the various capacitors in the emitter circuit to charge.

The d.c. conditions are varied by means of the two potentiometers which may be used as shunt or series controls according to the setting of the switches S2 and S3 (HIGH/LOW). The emitter current may be measured using a meter plugged into the jack socket. A meter current of 150μA corresponds to an emitter current of 1.5mA. The meter resistance must be made up to a value of 1500Ω. The tolerance is ± 70Ω for an additional error of 0·5 per cent. The use of such a system obviates the risk of the emitter being open-circuited with the collector voltage on, during the insertion or removal of an emitter current meter. The emitter current is almost unaffected by the presence or absence of the meter.

The Control Unit is 8½ in. wide, 6 in. high and 4½ in. deep. It is designed to house four Ever Ready batteries Type PP6 (or equivalent) of 9 volts each.

If it is desired to make measurements using a d.c. supply exceeding 18 volts, the procedure is as follows:

1 Turn the Collector " SET VOLTS " and Emitter " SET CURRENT " controls fully counter-clockwise, and set both switches to " LOW ".

2 Connect the external voltage sources to the Collector and Emitter jacks for EXTERNAL SUPPLIES. The positive battery terminal should be connected to the tip of the associated jack plug.

3 Adjust the Emitter " SET CURRENT " control for the required current reading: if this exceeds 1·5mA the existing meter must be replaced by one of suitably greater full-scale deflection.

4 Adjust the Collector " SET VOLTS " control for the required voltage reading and check that the emitter current remains at the required value.

5 If the required meter readings cannot be obtained, the appropriate switch must be changed from " LOW " to " HIGH ". If the readings are still not obtainable, a higher voltage source must be used, but care must be taken not to exceed the rated working voltage of the electrolytic capacitors in the adaptors.

Note: *Most r.f. transistors have only three connecting leads: emitter, base and collector. When such transistors are being measured, the screen socket (S) on the Adaptor should not be used.*

Some v.h.f. transistors have a fourth connecting lead. This is connected to a screen inside the transistor body, which reduces the capacitive coupling from the emitter and base to the collector. This lead should be connected to the S socket on the Adaptor, even though the measurement be made at a relatively low frequency.

NPN Transistors

The text of this handbook refers mainly to the p-n-p Adaptors but all the information applies also to the n-p-n Adaptors. The two series of Adaptors are so wired that both are suitable for connexion to the Control Unit. The measurement procedure with, for example, a Q601B Adaptor (Y_{11} PNP) is exactly the same as with a Q601W Adaptor (Y_{11} NPN). The only difference between the two series of Adaptors is in the internal wiring.

(**Note:** *In instruments which are fitted with a TRANSISTOR/NORMAL switch under the wooden top panel, alteration to the bridge circuit is made by operating the switch. It is not necessary to follow the procedure described in para. 2.3, p.7 of the handbook when using these instruments.*

APPENDIX I

α – ADAPTOR. CORRECTION FOR STRAY CAPACITANCE C ACROSS RESISTOR R (see Fig. 13(b))

If C is taken into account the term $\dfrac{R}{1+j\omega CR}$ must be substituted for R in the expression for α (*given near the top of page* 20).

Thus, the measured value α_t is given by:

$$\alpha_t = \alpha_{rt} - j\alpha_{xt} = \left(\frac{1}{R_s} + j\omega C_s\right)\frac{R}{1+j\omega CR}$$

$$= \left(\frac{1}{R_s} + j\omega C_s\right)\frac{R(1-j\omega CR)}{1+\omega^2C^2R^2}$$

$$= \frac{R\left(\dfrac{1}{R_s} + j\omega C_s - j\omega C\dfrac{R}{R_s} + \omega^2CC_sR\right)}{1+\omega^2C^2R^2}$$

$$= \left(\frac{R}{1+\omega^2C^2R^2}\right)\left[\left(\frac{1}{R_s} + \omega^2CC_sR\right) + j\left(\omega C_s - \omega C\frac{R}{R_s}\right)\right]$$

$$= \left(\frac{R}{1+\omega^2C^2R^2}\right)\left[\frac{1}{R_s}\left(1+\omega^2CC_sRR_s\right) + j\omega C_s\left\{1-\left(\frac{C}{C_s}\times\frac{R}{R_s}\right)\right\}\right]$$

Usually $\omega^2C^2R^2 \ll 1$ at all frequencies and can be neglected.

Thus

$$\alpha_{rt} = \frac{R}{R_s}\left(1+\omega^2CC_sRR_s\right) \qquad \ldots \quad (19)$$

$$\alpha_{xt} = -\omega C_sR\left[1-\left(\frac{C}{C_s}\times\frac{R}{R_s}\right)\right] \qquad \ldots \quad (20)$$

These equations represent the true balance conditions of the Bridge and they show the importance of keeping the value of C as small as possible.

If the fraction $\dfrac{R}{R_s}$ were used for evaluating α_r, then the value obtained would be lower by a term $\omega^2CC_sRR_s$.

Similarly, to obtain the correct value of α_{xt}, the value $\left(\dfrac{C}{C_s}\times\dfrac{R}{R_s}\right)$ is computed and used in equation (20).

In practise it is found that C_s has a measured value of approximately -3 to -5pF and C may vary up to 2pF.

Taking a typical R value to be 10kΩ and R_s 10·8kΩ, the error arising from C can be estimated.

The resistive part of current gain, α_r

This is affected by the term $\omega^2CC_sRR_s$. At and below 1Mc/s:

$\omega^2CC_sRR_s \leqslant 0{\cdot}024$ approximately.

At 5Mc/s:

$\omega^2CC_sRR_s = 0{\cdot}6$ approximately.

The reactive part of current gain, α_x

The value of α_x is affected at all frequencies by the term:

$$-\left(\frac{C}{C_s}\times\frac{R}{R_s}\right).$$

The above errors are allowed for in the measurement procedure described in 5.3.

APPENDIX II

α – ADAPTOR. CORRECTION OF THE α RESULTS FOR THE EFFECTS OF BASE RESISTANCE AND COLLECTOR CAPACITANCE, AND FOR THE EFFECTIVE STRAY CAPACITANCE ACROSS THE EMITTER FEED RESISTOR

A simple equivalent circuit is shown in Fig. 14.

At balance:

$$i_b r_{bb}' = i_1 \times \frac{1}{j\omega C_c}$$

$$i_o = \alpha i_e + i_1 = \alpha i_e + i_b r_{bb}' \times j\omega C_c$$

$$\text{Also} \quad i_b = i_e - i_o$$

$$\therefore \quad i_o = \alpha i_e + (i_e - i_o)\, r_{bb}'\, j\omega C_c$$

$$\therefore \quad i_o(1 + r_{bb}'\, j\omega C_c) = (\alpha + r_{bb}'\, j\omega C_c)\, i_e$$

$$\therefore \quad i_o = i_e \frac{\alpha + r_{bb}'\, j\omega C_c}{1 + r_{bb}'\, j\omega C_c}$$

$$\text{Also} \quad i_e \simeq \frac{E}{R}(1 + j\omega CR)$$

$$\therefore \quad i_o = \frac{E}{R}(1 + j\omega CR)\, \frac{\alpha + r_{bb}'\, j\omega C_c}{1 + r_{bb}'\, j\omega C_c}$$

At balance:

$$i_o = i_s \text{ and}$$

$$i_s = E\left(\frac{1}{R_s} + j\omega C_s\right)$$

Thus

$$\frac{\alpha + r_{bb}'\, j\omega C_c}{1 + r_{bb}'\, j\omega C_c} = \frac{R}{1 + j\omega CR}\left(\frac{1}{R_s} + j\omega C_s\right)$$

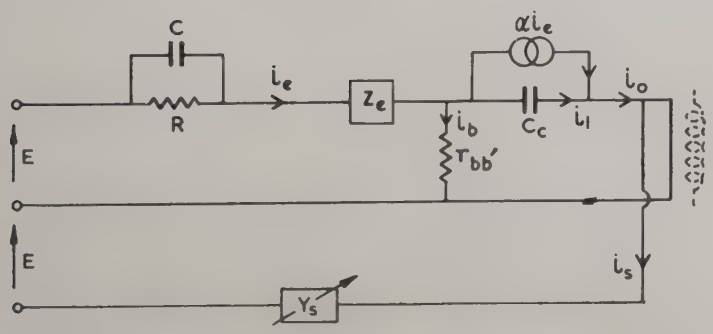

Fig. 14. α Adaptor—Simplified Equivalent Circuit

Therefore

$$\alpha = \frac{R}{1 + j\omega CR}\left(\frac{1}{R_s} + j\omega C_s\right)\left(1 + r_{bb'}\, j\omega C_c\right) - r_{bb'}\, j\omega C_c$$

$$= \frac{R(1 - j\omega CR)}{1 + \omega^2 C^2 R^2}\left(\frac{1}{R_s} + j\omega C_s + j\frac{\omega C_c r_{bb'}}{R_s} - \omega^2 C_c C_s r_{bb'}\right) - j\omega C_c r_{bb'}$$

$$\text{Let } \alpha = \alpha_r - j\alpha_x$$

Real part of α,

$$\alpha_r = \frac{R}{1 + \omega^2 C^2 R^2}\left(\frac{1}{R_s} + \omega^2 C C_s R + \frac{\omega^2 C C_c R.r_{bb'}}{R_s} - \omega^2 C_c C_s\, r_{bb'}\right)$$

$$= \frac{R}{R_s} \times \frac{1}{1 + \omega^2 C^2 R^2}\left(1 + \omega^2 C C_s R R_s + \omega^2 C C_c R.r_{bb'} - \omega^2 C_c C_s r_{bb'}.R_s\right)$$

Imaginary part of α,

$$-j\alpha_x = \frac{R}{1 + \omega^2 C^2 R^2}\left(-j\omega C\frac{R}{R_s} + j\omega C_s + j\frac{\omega C_c r_{bb'}}{R_s} - j\omega^3 C C_c C_s R r_{bb'}\right) - j\omega C_c r_{bb'}$$

$$= \frac{jR\omega C_s}{1 + \omega^2 C^2 R^2}\left(1 - \frac{\omega C}{\omega C_s}\cdot\frac{R}{R_s}\cdot\frac{\omega C_c}{\omega C_s}\cdot\frac{r_{bb'}}{R_s} - \omega^2 C C_c R.r_{bb'}\right) - j\omega C_c r_{bb'}$$

$$\therefore -\alpha_x = \frac{R\omega C_s}{1 + \omega^2 C^2 R^2}\left(1 - \frac{C}{C_s}\cdot\frac{R}{R_s} + \frac{C_c}{C_s}\cdot\frac{r_{bb'}}{R_s} - \omega^2 C C_c R.r_{bb'}\right) - \omega C_c\, r_{bb'}$$

In practice

$$1 + \omega^2 C^2 R^2 \ll 1$$
$$\omega^2 C C_c.r_{bb'}.R \ll 1$$

Thus

$$\alpha_r \simeq \frac{R}{R_s}\left(1 + \omega^2 C C_s.R R_s - \omega^2 C_c C_s r_{bb'}.R_s\right)$$

and

$$-\alpha_x \simeq \omega C_s R\left(1 - \frac{C}{C_s}\cdot\frac{R}{R_s} + \frac{C_c}{C_s}\cdot\frac{r_{bb'}}{R_s}\right) - \omega C_c r_{bb'}$$

The above equations give the *internal* alpha and take into account the effects of base resistance and collector capacitance.

APPENDIX III

Y_{11}' ADAPTOR. EFFECT OF INDUCTANCES IN SERIES WITH THE EMITTER AND THE BASE OF THE TRANSISTOR, AND THE SHUNT CAPACITANCE FROM COLLECTOR TO NEUTRAL

As mentioned earlier in the text, it is important to keep any impedance in series with the emitter or the base to a minimum. The situation is shown in Fig. 15.

At the highest frequency, i.e. at 5Mc/s, an attempt was made to keep ωL_2 less than 1/100 of the series value of the emitter reactance.

For a typical radio-frequency transistor (such as OC45) the maximum series reactance at 5Mc/s is between 10 and 20 ohms. This gives a value of $L_1 \leqslant 0{\cdot}005\mu$H.

The requirement for inductance in series with the base is less stringent and its value need only be $L_2 \leqslant 0{\cdot}02\mu$H.

In order to achieve these values in practice, capacitor C_1 is connected directly across the points to which the emitter and collector leads of the transistor are connected. As mentioned previously, printed circuits are employed to keep inductances low.

The stray capacitance from the collector lead to NEUTRAL (C) must be kept low and in practice is less than 10pF. To achieve this, the copper (of the printed board) immediately below the components R_1, R_5, R_6 and R_7 is etched away on both sides of the board. The lower silver-plated brass plate is cut away at this place for the same reason. The remaining areas of copper not used for connexions are all connected together and to the NEUTRAL terminal.

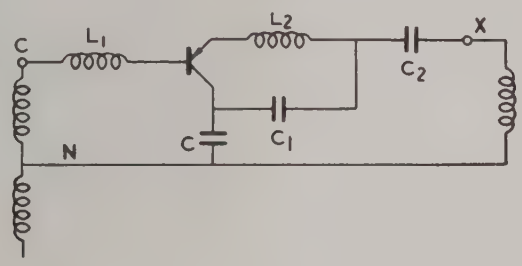

Fig. 15. Y_{11}' Adaptor—Unwanted Reactances ωL_1, ωL_2 and $1/\omega C$

APPENDIX IV

Y_{11}' ADAPTOR. ANALYSIS OF CIRCUIT AND PHASE-SHIFTS INTRODUCED BY D.C. SUPPLIES

Fig. 16 shows the full circuit of the adaptor and the current directions assumed for the analysis. In order to measure the admittance Y_{11}' correctly it is necessary to satisfy the following basic equations of the transistor:

$$i_e = i_b + i_c$$

$$i_e = (1 + \alpha')\, i_b$$

$$i_c = \alpha' i_b$$

Unless emitter, collector and base currents are related as above *in the actual circuit*, an error will result.

The following analysis outlines the steps taken in the design to ensure that this is not so.

At balance, when the voltage across the right-hand-side transformer is zero, the necessary condition is that the current i_o' or i_o flowing into the Neutral should enter the base.

This would always be so if $i_1 = i_c$, reactance $\frac{1}{\omega C_1} \to 0$ and currents

$$i_2 = i_4 = i_5 = i_6 = 0.$$

(Current i_3 which, as shown later, is the " corrective " current, must be assumed for the moment to be zero.)

Under these conditions

$$i_o - i_o' = i_b.$$

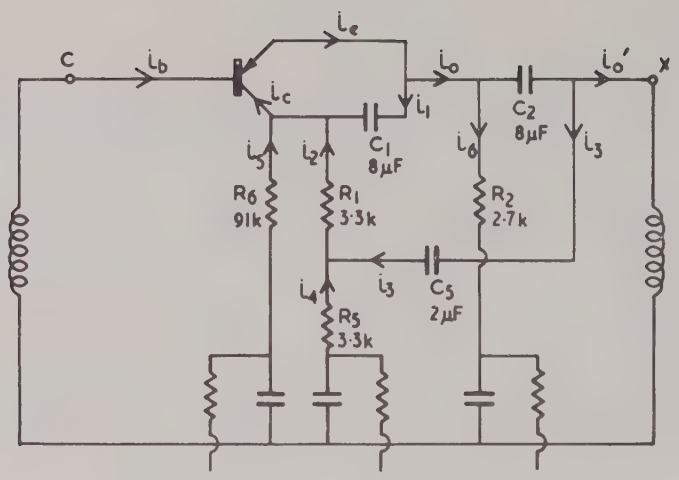

Fig. 16. Y_{11}' Adaptor—Phase Shift Analysis

In practice these conditions cannot be met but, at low frequencies, if R_6, $R_1 + R_5$, and R_2 were made very large, the currents i_5, i_2 and i_6 could be neglected. However, this raises two difficulties. One is that this would require very high d.c. voltages which is inconvenient. The second, more serious, difficulty, is that at very high frequencies the stray capacitances across these high resistances would introduce large phase-shifts (and capacitive currents which would increase the currents i_5, i_2 and i_6, all three being made heavily reactive).

Suppose for a moment that i_3 can be ignored (by open-circuiting the lead). Let R_6 be made very high, since this is in series with the meter and will thus carry only a very small a.c. current. Assume also that $\frac{1}{\omega C_2} \to 0$ so that in the first instance the effect of the small reactance it presents does not have to be considered. Thus the top of R_2 (at balance) is at Neutral potential. In any event, since i_o or i_o' should be equal to i_b and i_1 should be equal to i_c and $i_c = \alpha'.i_b$, if C_1 and C_2 are of equal value, then for the same reactance of C_1 and C_2 the voltage drop across C_1 will be α' times greater than the voltage across C_2.

With these simplifications, the currents to consider are as shown in Fig. 17.

Let $R_1 + R_5 = R_1'$ and $i_o = i_o'$ since it has been assumed $\frac{1}{\omega C_2} \to 0$.

$$\text{Then } i_o = i_e - i_1$$

$$\text{an } i_1 = i_c \times \frac{R_1'}{R_1' + \frac{1}{j\omega C_1}}.$$

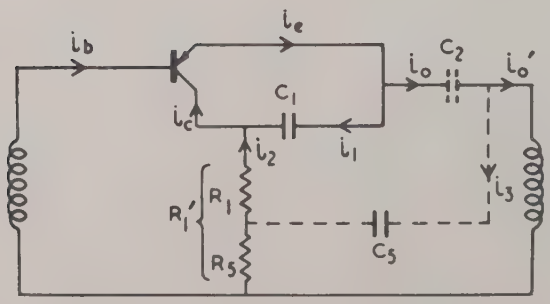

Fig. 17. Y_{11}' Effective Measurement Circuit

Also

$$i_e = (1 + \alpha')\, i_b$$
$$i_c = \alpha' i_b$$

$$\therefore\ i_o = (1 + \alpha')i_b - \alpha' i_b \left(\frac{R_1'}{R_1' + \dfrac{1}{j\omega C_1}} \right)$$

$$= \left(1 + \alpha' - \alpha' \frac{R_1'}{R_1' + \dfrac{1}{j\omega C_1}} \right) i_b$$

$$= \left\{ 1 + \alpha' - \frac{\alpha'(R_1')^2}{(R_1')^2 + \left(\dfrac{1}{\omega C_1}\right)^2} - j \frac{\alpha' R_1' \cdot \dfrac{1}{\omega C_1}}{(R_1')^2 + \left(\dfrac{1}{\omega C_1}\right)^2} \right\} i_b$$

In practice, $R_1' \simeq 7\text{k}\Omega$, $C_1 \simeq 8\mu\text{F}$.

$\therefore$ At the lowest frequency of the B601 Bridge,

$$\left(\frac{1}{\omega C_1}\right)^2 = \left(\frac{10^6}{2\pi \times 15 \times 10^3 \times 8}\right)^2 = \left(\frac{10^3}{750}\right)^2 \simeq 2 \ll (R_1')^2 = 50 \times 10^6$$

Thus

$$i_o \simeq i_b \left(1 - j \frac{\alpha'}{R_1' \omega C_1} \right)$$

For the j term to be negligible

$$\frac{\alpha'}{R_1' \omega C_1} \leqslant \frac{1}{500} \text{ or preferably } \leqslant \frac{1}{1000}$$

Since α' is high (say at least 45) and for convenience $R_1' \simeq 7\text{k}\Omega$ (d.c.) the required value of C_1 at 15kc/s would be $\geqslant 100\mu\text{F}$. Although such components are available for low frequencies, above about 100kc/s they are unreliable.

To eliminate the j term

Suppose that resistance R_1' be split into R_1 and R_5 and from their junction a capacitor C_5 is returned to the other side of C_2 (*see Fig.* 17). The value of C_5 is so chosen that $1/\omega C_5 \ll R_5$.

At balance, one side of C_5 is in fact connected to Neutral. (A current i_3 will flow through C_5 towards the junction of R_1 and R_5, and will give rise to a current i_2 flowing into the collector.)

Hence, $\quad i_o' = i_o - i_3$

$\quad i_1 = i_c - i_2$

and $\quad i_o = i_e - i_1 = i_e - i_c + i_2$

$$\therefore \quad i_o' = i_o - i_3 = i_o - i_2 \left(\frac{R_5}{R_5 + \dfrac{1}{j\omega C_5}} \right) \text{ (at balance)}$$

$$i_o' = i_e - i_c + i_2 \left(1 - \frac{R_5}{R_5 + \dfrac{1}{j\omega C_5}} \right)$$

If the term in the bracket is made to tend towards zero, then $i_o' = i_b$ which was the original aim.

In practice, if $C_5 = 2\mu F$, and $R_5 = 3{\cdot}3k\Omega$, even at 15kc/s

$$1 - \frac{R_5}{R_5 - \dfrac{1}{j\omega C_1}} = 1 - \frac{3300}{3300 - j1{\cdot}2}$$

$$\simeq 1 - 1 + j\,0{\cdot}0004$$

$$= j\,0{\cdot}0004 \quad \text{which is negligible.}$$

Consider again the currents i_5 (through R_6) and i_6 (through R_2). The phase-shift introduced by the network C_2, R_2 opposes that produced by the network R_6, C_1.

The currents are given by:

$$i_5 = i_c \times \frac{R_6}{R_6 + \dfrac{1}{j\omega C_1}} = \alpha' i_b \times \frac{R_6}{R_6 + \dfrac{1}{j\omega C_1}}$$

$$\text{and } i_6 = i_o \times \frac{R_5}{R_5 + \dfrac{1}{j\omega C_1}} \simeq i_b \frac{R_5}{R_5 + \dfrac{1}{j\omega C_1}}$$

The full equation of the transistor now becomes:

$$i_o' = i_e - i_c + i_2 \left(1 - \frac{R_5}{R_5 + \dfrac{1}{j\omega C_5}} \right) - i_5 + i_6$$

If $i_5 = i_6$ no error will result.

To obtain this it is necessary that:

$$\tan^{-1} \frac{1}{R_2 \omega C_2} \simeq \tan^{-1} \frac{\alpha'}{R_6 \omega C_1}$$

A compromise was reached by choosing R_2, R_6, C_1 and C_2 of such values that transistors with current gains α' from 45 to 90 could be measured with negligible error. Care was taken to choose the capacitors for C_1 and C_2 with a low impedance over the whole band of 15kc/s to 5Mc/s.

APPENDIX V

Y_{21}' ADAPTOR. CORRECTION FOR LOW-FREQUENCY ERRORS

A low-frequency equivalent circuit for the Y_{21}' Adaptor, from which the error in C_s can be calculated, is shown in Fig. 18.

As the reactance of L_p at low frequencies is much lower than the reflected load resistance of R_{IN}, the load can be ignored.

Therefore $\quad -V \simeq i_1 (r_c + j\omega L_p)$

and $\quad V_1 \simeq i_1 \, j\omega L_p$

therefore $\quad V_1 = \dfrac{-V j\omega L_p}{r_c + j\omega L_p}$

Now $\quad V_2 = \dfrac{-V_1}{10}$

$$= \frac{V j\omega L_p}{10\,(r_c + j\omega L_p)} \quad \ldots \quad \ldots \quad \ldots \quad \ldots \quad \ldots \quad \ldots \quad \ldots \quad (1)$$

Also $\quad V_2 = i_2 \left(R_{IN} + \dfrac{1}{j\omega C_1} \right)$

and $\quad V_3 = i_2 \, R_{IN}$

Therefore $\quad V_3 = V_2 \dfrac{j\omega C_1 R_{IN}}{1 + j\omega C_1 R_{IN}} \quad \ldots \quad \ldots \quad \ldots \quad \ldots \quad \ldots \quad \ldots \quad (2)$

Substituting for V_2 from (1):—

$$V_3 = \frac{V j\omega L_p \quad \times \quad j\omega C_1 R_{IN}}{10(r_c + j\omega L_p)(1 + j\omega C_1 R_{IN})} \quad \ldots \quad \ldots \quad \ldots \quad \ldots \quad \ldots \quad (3)$$

$$i_3 = V_3 \; Y_{21}' = V_3 \; \frac{(1 + j\omega C_{21}' R_{21}')}{R_{21}'}$$

Also $\quad i_s = \dfrac{V}{Z_s} = \dfrac{V(1 + j\omega C_s R_s)}{R_s}$

For balance $\quad i_s = -i_3$

therefore $\quad V \dfrac{(1 + j\omega C_s R_s)}{R_s} = -V_3 \dfrac{(1 + j\omega C_{21}' R_{21}')}{R_{21}'}$

Substituting for V_3 from (3):—

$$\frac{(1 + j\omega C_s R_s)}{R_s} = \frac{-j\omega L_p \;\; j\omega C_1 R_{IN} \;\; (1 + j\omega C_{21}' R_{21}')}{(r_c + j\omega L_p) \;\; (1 + j\omega C_1 R_{IN}) 10 R_{21}'}$$

Cross multiplying:—

$$\omega^2 L_p C_1 R_{IN} R_s + j\omega^3 L_p C_1 R_{IN} C_{21}' R_{21}' R_s =$$
$$10 R_{21}' (r_c - \omega^2 L_p C_1 R_{IN} + j\omega L_p + j\omega C_1 R_{IN} r_c + j\omega C_s R_s r_c - j\omega^3 L_p C_1 R_{IN} C_s R_s - \omega^2 C_s R_s L_p - \omega^2 C_s R_s C_1 R_{IN} r_c)$$

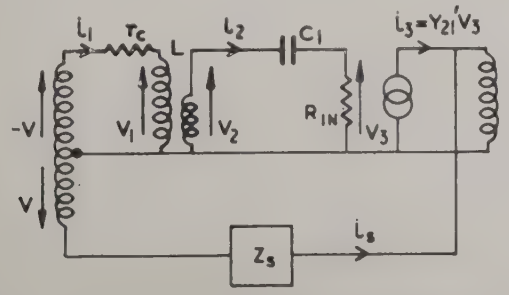

Fig. 18. Low-frequency Equivalent Circuit of Y_{21}' Measurement

Taking imaginary part:—

$$\omega^3 L_p C_1 R_{IN} C_{21}' R_{21}' R_s = 10\ R_{21}'\ (\omega L_p + \omega C_1 R_{IN} r_c + \omega C_s R_s r_c - \omega^3 L_p C_1 R_{IN} C_s R_s)$$

Dividing by $\omega R_{21}'$ and rearranging:—

$$C_{21}' = 10 \left(\frac{-\omega^2 L_p C_1 R_{IN} C_s R_s + r_c (C_1 R_{IN} + C_s R_s) + L_p}{\omega^2 L_p C_1 R_{IN} R_s} \right)$$

$$= 10 \left(-C_s + \frac{r_c\ (C_1 R_{IN} + C_s R_s) + L_p}{\omega^2 L_p C_1 R_{IN} R_s} \right)$$

The second term is the error in C_s and since $C_s R_s \ll C_1 R_{IN}$

$$\text{the error is } + 10 \frac{r_c C_1 R_{IN} + L_p}{\omega^2 L_p C_1 R_{IN} R_s}$$

The error capacitance is positive, so the quantity given by the above term must be added to the bridge reading to give C_{21}'. The error-causing components have the following values:

$$r_c = 0{\cdot}46\Omega$$
$$C_1 = 8\mu\text{F}$$
$$R_{IN} = 600 - 800\Omega$$
$$L_p = 5{\cdot}2\text{mH}$$

Note: R_{IN} *is a parallel combination of the transistor input resistance* R_{11}' *and the series resistance of the d.c. supplies* (3·3kΩ *and* 5·6kΩ).

APPENDIX VI

Y_{21}' ADAPTOR. CORRECTION FOR HIGH-FREQUENCY ERROR

The high-frequency equivalent circuit for the Y_{21}' Adaptor, from which the error in R_{21}' due to phase-shift can be calculated, is shown in Fig. 19.

$$V_1 = -\frac{(-V)}{10} = \frac{V}{10}$$

therefore $$V_2 = \frac{V}{10} \cdot \frac{R_{11}'}{R_{11}' + j\omega l}$$

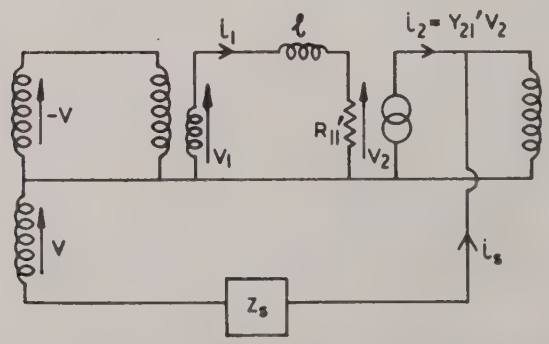

Fig. 19. High-frequency Equivalent Circuit of Y_{21}' Measurement

Thus $$i_2 = Y_{21}' V_2 = \frac{(1+j\omega C_{21}' R_{21}')}{R_{21}'} \cdot \frac{V}{10} \cdot \frac{R_{11}'}{R_{11}' + j\omega l}$$

and $$i_s = V \frac{(1+j\omega C_s R_s)}{R_s}$$

Now $$i_s = -i_2$$

therefore $$\frac{1+j\omega C_s R_s}{R_s} = \frac{-(1+j\omega C_{21}' R_{21}')\ R_{11}'}{10\ R_{21}'\ (R_{11}' + j\omega l)}$$

Cross multiplying:—

$$-R_{11}' R_s\,(1+j\omega C_{21}' R_{21}') = 10 R_{21}'\,(R_{11}' + j\omega l)\,(1 + j\omega C_s R_s)$$

Real part:—

$$-R_{11}' R_s = 10\,R_{21}'\,(R_{11}' - \omega^2 l C_s R_s)$$

therefore $$R_{21}' = \frac{-R_{11}'\ R_s}{10\ (R_{11}' - \omega^2 l C_s R_s)}$$

$$= \frac{R_s \dfrac{R_{11}'}{\omega^2 l_{C_s}}}{10\left(R_s - \dfrac{R_{11}'}{\omega^2 l C_s}\right)}$$

The term $R_{11}'/\omega^2 l_{C_s}$ is the error term which appears in parallel with R_s. Since the capacitive reading C_s is negative the above equation can be written as:—

$$R_{21}' = \frac{-R_s R_e}{10\,(R_s + R_e)}$$

where $$R_e = R_{11}'/\omega^2 l C_s$$

C_s is a direct bridge reading

and l is the leakage inductance of the phase-reversing transformer referred to the secondary (10 turns) and is 0·15μH.

TRANSISTOR ADAPTORS—COMPONENT LIST

Y_{22} (*Fig.* 20) Q601C (PNP) & Q601X (NPN)

Comp. Ref.	Value	Tolerance	Rating
R1	4·7kΩ	± 10%	½W
R2	91kΩ	± 10%	¼W
R3	3·3kΩ	± 10%	½W
R4	4·7kΩ	± 10%	½W
R5	8·2kΩ	± 10%	½W
R6	220Ω	± 10%	½W
R7	220Ω	± 10%	½W
R8	220Ω	± 10%	½W
C1	Not used		25V
C2	16μF (elec.)		25V
C3	16μF (elec.)		25V
C4	2μF (elec.)		25V
C5	0·1μF (elec.)		50V
C6	0·25μF		50V
C7	2μF (elec.)		25V

Y_{11} (*Fig.* 21) Q601B (PNP) & Q601W (NPN)

Comp. Ref.	Value	Tolerance	Rating
R1	4·7kΩ	± 10%	½W
R2	2·7kΩ	± 10%	½W
R3	220Ω	± 10%	½W
R4	220Ω	± 10%	½W
R5	4·7kΩ	± 10%	½W
R6	47kΩ(H.S.)	± 1%	¼W
R7	47kΩ(H.S.)	± 1%	¼W
R8	220Ω	± 10%	½W
R9	2·7kΩ	± 10%	½W
R10	2·7kΩ	± 10%	½W
C1	16μF (elec.)		25V
C2	16μF (elec.)		25V
C3	0·1μF (elec.)		50V
C4	0·1μF (elec.)		50V
C5	2μF (elec.)		25V
C6	0·1μF (elec.)		50V
C7	0·1μF (elec.)		50V

Y_{11}' (*Fig.* 22) Q601A (PNP) & Q601V (NPN)

Comp. Ref.	Value	Tolerance	Rating
R1	3·3kΩ	± 10%	½W
R2	3·3kΩ	± 10%	½W
R3	220Ω	± 10%	½W
R4	2·7kΩ	± 10%	½W
R5	220Ω	± 10%	½W
R6	91kΩ (H.S.)	± 1%	¼W
R7	8·2kΩ	± 10%	½W
C1	16μF (elec.)		25V
C2	16μF (elec.)		25V
C3	2μF (elec.)		25V
C4	2μF (elec.)		25V
C5	0·1μF (elec.)		50V
C6	2μF (elec.)		25V

H.S. = High Stability Resistor

α (*Fig.* 23) Q601D (PNP) & Q601Y (NPN)

Comp. Ref.	Value	Tolerance	Rating
R1	4·7kΩ	± 10%	½W
R2	5·6kΩ	± 10%	½W
R3	91kΩ (H.S.)	± 1%	¼W
R4	220Ω	± 10%	½W
R5	220Ω	± 10%	½W
R6	8·2kΩ	± 10%	½W
R7	10kΩ (H.S.)	± 1%	¼W
C1	1μF (elec.)		50V
C2	16μF (elec.)		25V
C3	2μF (elec.)		25V
C4	2μF (elec.)		25V
C5	1μF		50V

Y_{21}' (*Fig.* 24) Q601E (PNP) & Q601Z (NPN)

Comp. Ref.	Value	Tolerance	Rating
R1	220Ω	± 10%	½W
R2	5·6kΩ	± 10%	½W
R3	3·3kΩ	± 10%	½W
R4	47kΩ (H.S.)	± 1%	¼W
R5	3·3kΩ	± 10%	½W
R6	47kΩ (H.S.)	± 1%	¼W
R7	2·7kΩ	± 10%	½W
R8	2·7kΩ	± 10%	½W
R9	220Ω	± 10%	½W
R10	220Ω	± 10%	½W
C1	16μF (elec.)		25V
C2	16μF (elec.)		25V
C3	2μF (elec.)		25V
C4	0·1μF (elec.)		50V
C5	0·1μF (elec.)		50V
C6	0·1μF (elec.)		50V
C7	0·1μF (elec.)		50V

D.C. CONTROL UNIT
Q601 (*Fig.* 25)

Comp. Ref.	Value	Tolerance	Rating
RV1	5kΩ		
RV2	5kΩ		
R1	1·5kΩ (H.S.)	± 1%	
R2	12kΩ (H.S.)	± 1%	
R3	1·5kΩ (H.S.)	± 1%	

Elec. = Electrolytic Capacitor

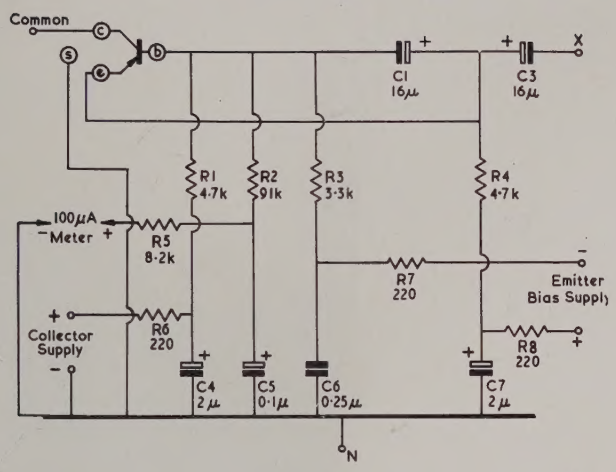

Fig. 20. Circuit Diagram, Y_{22} Adaptor Q601C
(D6562/D)

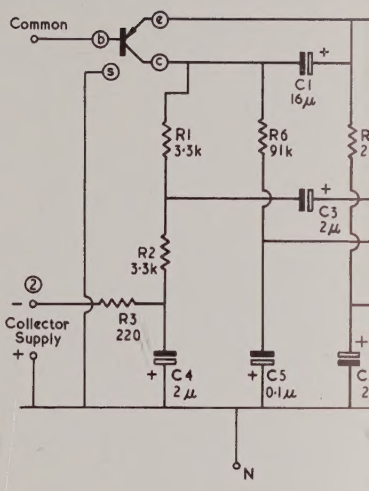

Fig. 22. Circuit Diagram, Y_{11} A
(D6564/D)

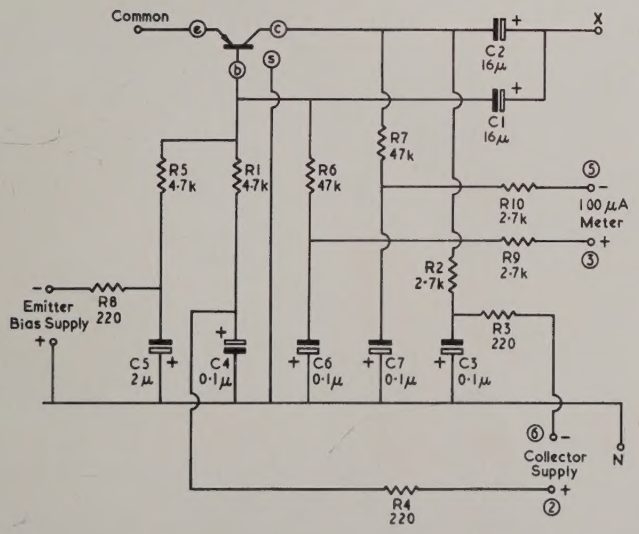

Fig. 21. Circuit Diagram, Y_{11} Adaptor Q601B
(D6563/D)

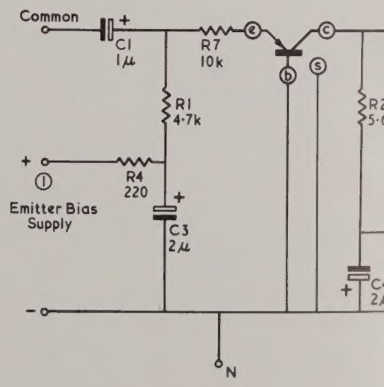

Fig. 23. Circuit Diagram, α Ad
(6565/D)

Note: *Figs. 20–24 refer to the PNP Adaptors (Q601A to Q601E resp*
(Q601V to Q601Z) are similar, but the polarity

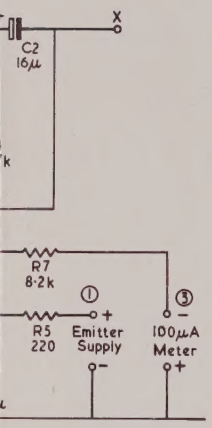

laptor Q601A

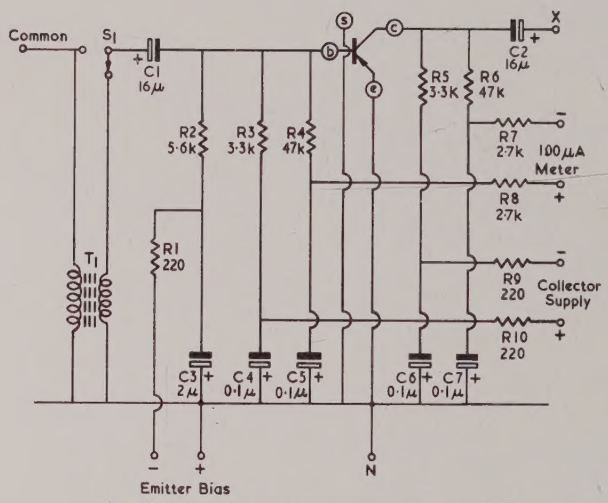

Fig. 24. Circuit Diagram, Y_{21}' Adaptor Q601E (D6566/E)

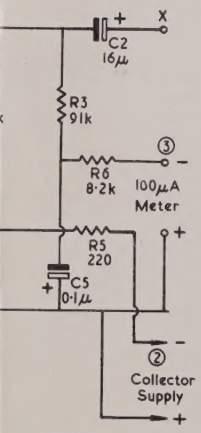

ptor Q601D

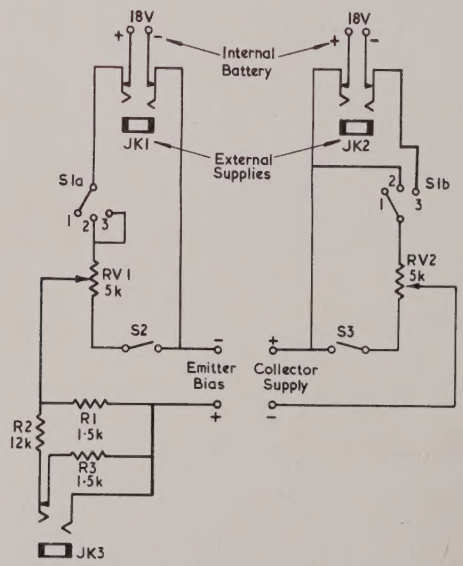

Fig. 25. Circuit Diagram, Control Unit O601 (D6567/B)

ectively). The circuit diagrams of the NPN Adaptors
f all electrolytic capacitors is reversed.

www.manualsplus.com
1004025

TELEPHONE : MALden 2202 *SALES AND SERVICE*

TEL

TEL

THE WAYNE KERR LABORATORIES LTD

Sycamore Grove, New Malden, Surrey.
Telephone MALden 2202
Telegraph Waynkerr, New Malden

WAYNE KERR CORPORATION

22 Frink Street, Montclair,
New Jersey 07042, U.S.A.
Telephone (201)746-2438
Telegraph Waynkerr, Montclair, New Jersey

YLVANIA

PUBLICATION TP5/2

Printed in England TYP/4/64/1000